The Drive & Control Company

Rexroth
Bosch Group

Rexroth IndraDrive Cs
Drive Systems with HCS01

Project Planning Manual Edition 05

R911322210

Title Rexroth IndraDrive Cs
Drive Systems with HCS01

Type of Documentation Project Planning Manual

Document Typecode DOK-INDRV*-HCS01******-PR05-EN-P

Internal File Reference RS-898e3e765ff4d61d0a6846a000329fdd-6-en-US-4

Purpose of Documentation

- Overview of the Rexroth IndraDrive Cs system
- Description of the allowed combinations of Rexroth IndraDrive Cs system components
- Selection of the system components of the Rexroth IndraDrive Cs system
- Specification applying to all components (ambient and operating conditions)
- Application description of system characteristics

Record of Revision

Edition	Release Date	Notes
05	2016-03	See index entry "Editions"
04	2015-12	Not published in English
03	2013-12	-
02	2012-07	-
01	2009-08	-

Published by Bosch Rexroth AG

Bgm.-Dr.-Nebel-Str. 2 ■ 97816 Lohr a. Main, Germany

Phone +49 9352 18 0 ■ Fax +49 9352 18 8400

http://www.boschrexroth.com/

Table of Contents

Page

Table of Contents

Page

Table of Contents

Page

Table of Contents

Table of Contents

Page

Table of Contents

Table of Contents

Page

Table of Contents

1 System presentation

1.1 Rexroth IndraDrive Cs range

1.1.1 Overview – Rexroth IndraDrive Cs

Rexroth IndraDrive Cs	
HCS01 converter	MSM, MS2N, MSK, MCL motors; third-party motors
	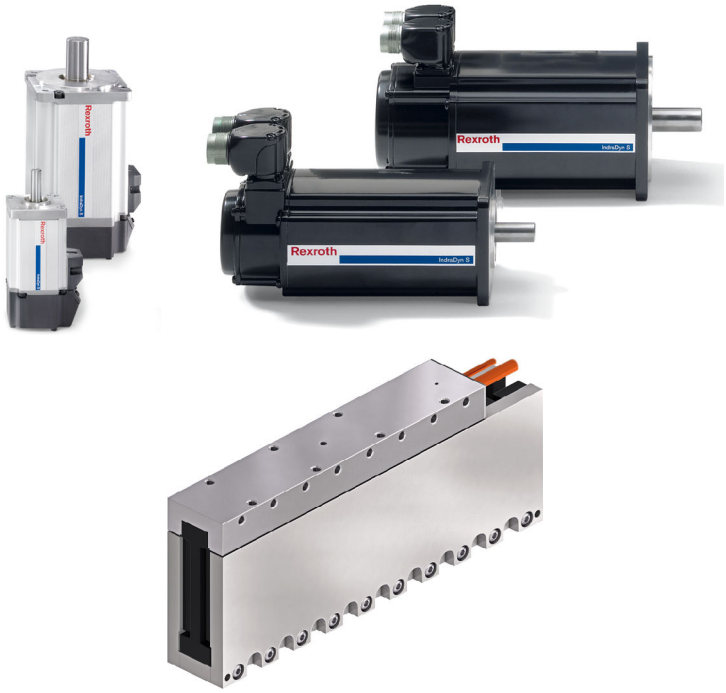

Tab. 1-1: Components of the Rexroth IndraDrive Cs range

System presentation

1.1.2 Target applications

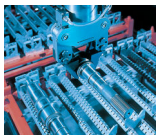	**General automation, handling, assembly** Automated assembly and handling systems, palletizing systems, pick-and-place systems, logistics …
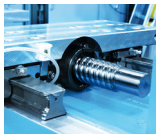	**Machine tools** Compact machines (e.g., for wood machining), secondary and servo drives …
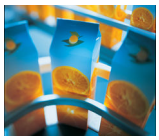	**Food and packaging industry** Filling and closing, palletizing, erecting cartons, closing cartons, labeling …
	**Printing machines** Label printing, labeling, digital printing, positioning, servo drives …
	**Semiconductor industry** Semiconductor/wafer production and handling, metalizing, cleaning, solar cell production …

Tab. 1-2: Target applications

1.1.3 Features

Functional features

- Compact type of construction
- Degree of protection IP20
- Control panel with programming module function
- Scalable signal processing and firmware
- Multi-encoder interface for all standard encoders (HIPERFACE®, EnDat2.1, EnDat2.2, SSI, TTL, sin/cos, resolver, MSM encoder)
- DC bus connection (at HCS01.1E-W00xx-x-03 devices)
- Analog input (14 bit, ±10 V)
- 8 digital inputs
  - 2 probe inputs
  - 1 combined I/O which can be configured as digital input or as digital output
- Performance-dependent fan control
- Integrated brake current measurement and monitoring
- Winding short circuit at motor output for shutdown as reaction to fatal errors
- Compact MSM motors
- 2 options for buffering the data of MSM encoders
  - Battery box (SUP-E0x-MSM-BATTERYBOX; can be mounted near the motor; one battery box is required for each drive controller)
  - Encoder cables (RKG0041, RKG0065) with D-Sub connector (RGS0001/K01) to connect a battery or an uninterruptible power supply
- Hall sensor adapter box SHL03.1 to operate MCL linear motors with digital Hall sensors

System presentation

HCS01 - ECONOMY vs. BASIC vs. ADVANCED

Functional equipment	HCS01.1E-W00**-A-0*-…		
	…E-S3 (ECONOMY)	…B-ET (BASIC)	…A-CC, …A-ET (ADVANCED)
Communication	sercos III / EtherCAT	Multi-Ethernet (incl. sercos III)	CC: sercos III master (cross communication) ET: Multi-Ethernet
		Alternative interface[1)] (PROFIBUS DP, CANopen)[2)]	Alternative interface[1)] (Multi-Ethernet, PROFIBUS DP, CANopen)
Encoder evaluation	Multi-encoder interface	Multi-encoder interface	Multi-encoder interface
		Optional multi-encoder interface[1)]	Optional multi-encoder interface[1)]
Encoder emulation	–	✓	✓
Integrated safety technology	L3 (Safe Torque Off) L4 (Safe Torque Off, Safe Brake Control)	L3 (Safe Torque Off) L4 (Safe Torque Off, Safe Brake Control) S4 (Safe Motion) S5 (Safe Motion) SB (Safe Motion Bus)	L3 (Safe Torque Off) L4 (Safe Torque Off, Safe Brake Control) S4 (Safe Motion) S5 (Safe Motion) SB (Safe Motion Bus)
IndraMotion	–	MLD-S[3)]	MLD-S[3)] MLD-M[3)]
Freely configurable digital inputs/outputs (incl. probe)	✓	✓	✓
Analog input	✓	✓	✓
Control panel			
• With programming module function	✓	✓	✓
• With slot for microSD memory card	✓	✓	✓
Optional I/O extension digital/analog	✓	✓	✓
Engineering Port	✓	✓	✓

1) **One** additional interface per converter for communication **or** encoder evaluation

2) If you use "PROFIBUS DP" or "CANopen" communication, the Multi-Ethernet function is no longer available. However, you can still use the connection points X24 and X25 as Engineering interfaces.

3) Firmware version MPx-17 or higher

Tab. 1-3: ECONOMY vs. BASIC vs. ADVANCED

Performance features

		 Size 1 (Width: 50 mm; Height: 215 mm)						 Size 2 (Width: 70 mm; Height: 268 mm)			 Size 3 (Width: 130 mm; Height: 268 mm)
HCS01.1E-W00… →		**03**	**06**	**09**	**13**	**05**	**08**	**18-A-02**	**18-A-03**	**28**	**54**
Mains connection voltage	V	3 AC 110 … 230 V*				3 AC 200 … 500 V**		3 AC 110 … 230 V*	3 AC 200 … 500 V**		
Maximum current	A_{rms}	3,3	6,0	9,0	13,0	5,0	8,0	18,0	18,0	28,0	54,0

* Single-phase operation allowed; for HCS01.1E-W0013 and HCS01.1E-W0018-A-02 with derating

** Single-phase operation not allowed

Tab. 1-4: Converter HCS01 - Performance Features

System presentation

Combination of HCS01 and MSM/MSK

	HCS01									
	3 AC 110 … 230 V					3 AC 200 … 500 V				
	W0003	W0006	W0009	W0013	W0018	W0005	W0008	W0018	W0028	W0054
MSM MSM019 … MSM041	■					T			-	-
MSK MSK030 … MSK070C-0150	□					■				□
MSK MSK070C-0300 … MSK103	-					□				■

■ Optimum combination
□ Some allowed combinations are possible
T Allowed combination (transformer required, as operation of MSM only allowed with a maximum of 3 AC 230 V)
- Combination not allowed

Tab. 1-5: Converter HCS01 and Motors MSM/MSK

☞ **Drive sizing with Rexroth IndraSize**

Rexroth IndraSize is a software for optimum sizing of a drive system consisting of the components Rexroth IndraDrive and IndraDyn.

Rexroth IndraSize is available as a download.

Interfaces

Overview

- Compatible with IndraDrive platform
- Ethernet-based communication with the following supported protocols:
  - sercos III
  - PROFINET IO
  - EtherNet/IP
  - EtherNet POWERLINK
  - EtherCAT
- Alternative communication:
  - PROFIBUS DP
  - CANopen
- Optional safety technology
- Optional multi-encoder interface
- Optional encoder emulation
- Analog input
- Freely configurable digital inputs/outputs

Supported encoder systems

Supported encoder systems

Encoder systems with a supply voltage of **5 and 12 V**:

- MSM motor encoder
- MS2N motor encoder
- MSK motor encoder
- $1V_{pp}$ sin-cos encoder; HIPERFACE®
- $1V_{pp}$ sin-cos encoder; EnDat 2.1; EnDat 2.2
- $1V_{pp}$ sin-cos encoder; with reference track
- 5V TTL square-wave encoder; with reference track
- SSI
- Combined encoder for SSI (combination of SSI and $1V_{pp}$ sin-cos encoder)
- Resolver (resolvers are **not** supported if optional "Safe Motion" safety technology is also in use)
- Hall sensor box SHL02.1
- Digital Hall sensor in conjunction with Hall sensor adapter box SHL03.1

System presentation

1.2 System configuration

1.2.1 System structure

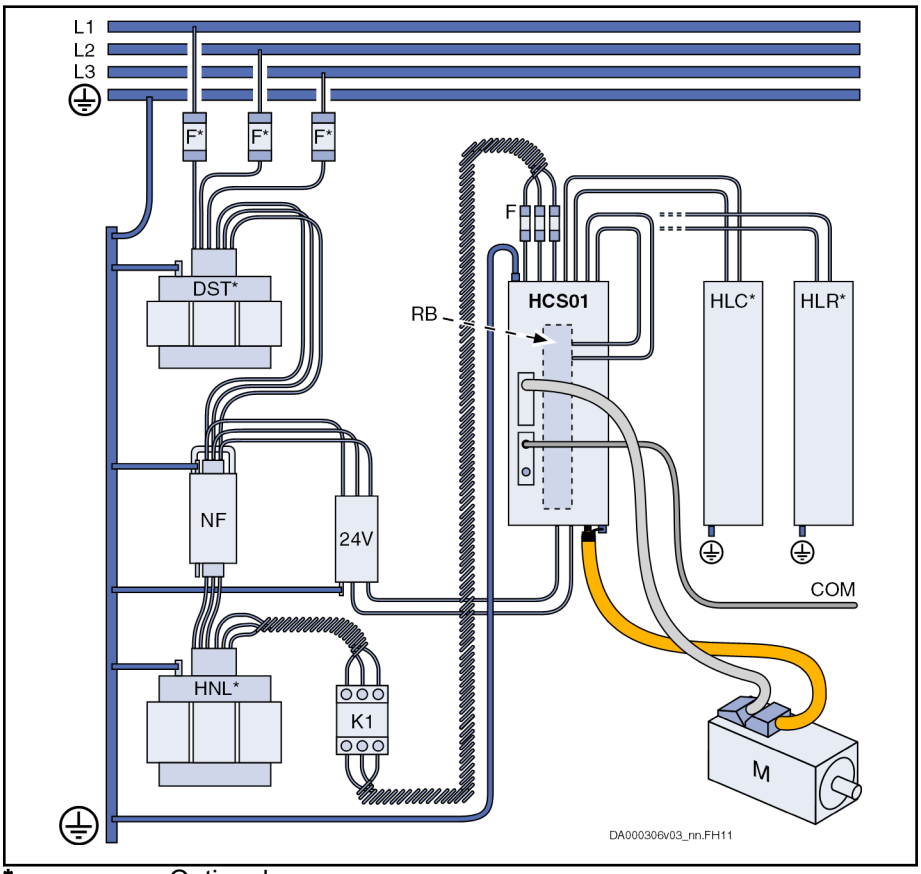

*	Optional
24V	Control voltage supply
COM	Communication
DST	Autotransformer
F	Fuses
HCS01	Converter
HLC	DC bus capacitor unit (for devices with DC bus connection)
HLR	External braking resistor
HNL	Mains choke
NF	Mains filter
K1	External mains contactor
M	Motor
RB	Integrated braking resistor (at the back of the drive controller)

Fig. 1-1: Drive System Rexroth IndraDrive Cs

1.2.2 System components

HCS01 drive controllers

Type code

Short type designation	1	2	3	4	5	6	7	8	9	10	11	12	13	14	15	16	17	18	19	20	21	22	23	24	25	26	27	28	29	30	31	32	33	34	35	36	37	38	39	40
Example:	H	C	S	0	1	.	1	E	-	W	0	0	1	3	-	A	-	0	2	-	E	-	S	3	-	E	C	-	N	N	-	N	N	-	N	N	-	F	W	
	①			②			③	④		⑤	⑥					⑦		⑧			⑨		⑩			⑪			⑫			⑬			⑭			⑮		

①	**Product:** HCS = HCS
②	**Series:** 01 = 01
③	**Design:** 1 = 1
④	**Power supply unit:** E = Feeding
⑤	**Cooling type:** W = Air, internal
⑥	**Maximum current [1]:** 0003 = 3 A 0005 = 5 A 0006 = 6 A 0008 = 8 A 0009 = 9 A 0013 = 13 A 0018 = 18 A 0028 = 28 A 0054 = 54 A
⑦	**Degree of protection:** A = IP20
⑧	**Mains connection voltage [1]:** 02 = 3 × AC 110 … 230 V 03 = 3 × AC 200 … 500 V
⑨	**Control section design [2]:** A = ADVANCED B = BASIC E = ECONOMY
⑩	**Communication [2]:** S3 = sercos 3 / EtherCAT CC = sercos 3 master (cross communication) ET = Multi-Ethernet

System presentation

Short type designation	1	2	3	4	5	6	7	8	9	10	11	12	13	14	15	16	17	18	19	20	21	22	23	24	25	26	27	28	29	30	31	32	33	34	35	36	37	38	39	40
Example:	H	C	S	0	1	.	1	E	-	W	0	0	1	3	-	A	-	0	2	-	E	-	S	3	-	E	C	-	N	N	-	N	N	-	N	N	-	F	W	
	①			②			③	④		⑤	⑥					⑦		⑧			⑨		⑩			⑪			⑫			⑬			⑭			⑮		
⑪	**Interface 1:** EC = Multi-encoder interface																																							
⑫	**Interface 2 [2]:** CN = CANopen DA = Digital/analog I/O extension EC = Multi-encoder interface EP = Engineering port EM = Encoder emulation ET = Multi-Ethernet NN = Not equipped PB = PROFIBUS																																							
⑬	**Interface 3 [2] [3]:** L3 = STO (Safe Torque Off) L4 = STO (Safe Torque Off) and SBC NN = Not equipped S4 = Safe Motion S5 = Safe Motion SB = Safe Motion Bus																																							
⑭	**Other design:** NN = None																																							
⑮	**Firmware:** FW = With control panel, firmware has to be ordered separately NW = Without control panel, without firmware																																							

1) See table "Possible combinations of maximum current and mains connection voltage"
2) See table "Possible combinations of options"
3) The L3, S4, S5 and SB interfaces guarantee both the function and the certification

Tab. 1-6: Type code HCS01

Possible combinations of maximum current and mains connection voltage:

Mains connection voltage [V]	Maximum current [A]								
	3	5	6	8	9	13	18	28	54
3 × AC 110 … 230	✓	–	✓	–	✓	✓	✓	–	–
3 × AC 200 … 500	–	✓	–	✓	–	–	✓	✓	✓

Tab. 1-7: Possible combinations of maximum current and mains connection voltage

Possible combinations of options:

Control section design	Communication	Interface 2								Interface 3					
		CN	DA	EC	EM	EP	ET	NN	PB	L3	L4	NN	S4	S5	SB
A	CC	✓	–	✓	✓	–	✓	✓	✓	✓	✓	✓	✓	✓	✓
		–	✓	–	–	–	–	–	–	–	–	✓	–	–	–
	ET	–	–	✓	✓	–	–	✓	–	✓	✓	✓	✓	✓	✓
		–	✓	–	–	–	–	–	–	–	–	✓	–	–	–
B	ET	✓	–	✓	✓	–	–	✓	✓	✓	✓	✓	✓	✓	✓
		–	✓	–	–	–	–	–	–	–	–	✓	–	–	–
		–	–	–	–	✓	–	–	–	✓	✓	✓	–	–	–
E	S3	–	–	–	–	✓	–	✓	–	✓	✓	✓	–	–	–

Tab. 1-8: Possible combinations of options

☞ The figure illustrates the basic structure of the type code. Our sales representative will assist you with the versions available.

System presentation

HAP01 control panel

View

Fig. 1-2: HAP01 control panel

Type code

Short type designation	1	2	3	4	5	6	7	8	9	10	11	12	13	14	15	16	17	18	19	20	21	22	23	24	25	26	27	28	29	30	31	32	33	34	35	36	37	38	39	40
Example:	H	A	P	0	1	.	1	N	-	0	1	8	-	N	N	-	F	W																						
	①			②			③	④		⑤				⑥			⑦																						

①	**Product:** HAP = Control panel
②	**Series:** 01 = 01
③	**Design:** 1 = 1
④	**Additional option:** A = ADVANCED control panel with memory card slot N = Standard control panel without memory card slot
⑤	**Memory size:** 018 = 18 MB (example)
⑥	**Other design:** NN = None
⑦	**Firmware:** FW = Firmware must be ordered as a separate subposition

Tab. 1-9: HAP01 type code

☞ The figure illustrates the basic structure of the type code. Our sales representative will assist you with the versions available.

HAP01 ↔ HCS01 assignment

Control panel	Drive controller
HAP01.1A	HCS01.1E-W****-*-**-A-CC (ADVANCED) HCS01.1E-W****-*-**-A-ET (ADVANCED) HCS01.1E-W****-*-**-B-ET (BASIC) [1)] HCS01.1E-W****-*-**-E-S3 (ECONOMY) [1)]
HAP01.1N	HCS01.1E-W****-*-**-B-ET (BASIC) HCS01.1E-W****-*-**-E-S3 (ECONOMY)

1) Requires firmware MPx-20 or higher

Tab. 1-10: HAP01 ↔ HCS01 assignment

- chapter "Standard control panel HAP01.1N" on page 230
- chapter "ADVANCED Control Panel HAP01.1A" on page 231

Firmware

Firmware types

ECONOMY

- FWA-INDRV*-MPE-16VRS-D5-x-NNN-NN
- FWA-INDRV*-MPE-17VRS-D5-x-NNN-NN
- FWA-INDRV*-MPE-18VRS-D5-x-NNN-NN
- FWA-INDRV*-MPE-20VRS-D5-x-NNN-NN

BASIC

- FWA-INDRV*-MPE-18VRS-D5-x-NNN-NN
- FWA-INDRV*-MPB-16VRS-D5-x-xxx-xx
- FWA-INDRV*-MPB-17VRS-D5-x-xxx-xx
- FWA-INDRV*-MPB-18VRS-D5-x-xxx-xx
- FWA-INDRV*-MPB-20VRS-D5-x-xxx-xx

ADVANCED

- FWA-INDRV*-MPC-17VRS-D5-x-xxx-xx
- FWA-INDRV*-MPC-18VRS-D5-x-xxx-xx
- FWA-INDRV*-MPC-20VRS-D5-x-xxx-xx

See also chapter "Firmware types" on page 44

📖 For detailed information, see the Functional Description of the firmware used (index entry "Overview of functions/functional packages").

System presentation

1.2.3 About this documentation

Purpose

⚠ WARNING **Personal injury and property damage caused by improper project planning for applications, machines and installations!**

Observe the contents of the documentation relevant to your drive system (see chapter "Documentations" on page 25).

This documentation contains the following:

- Overview of the Rexroth IndraDrive Cs system
- Description of the allowed combinations of Rexroth IndraDrive Cs system components
- Selection of the system components of the Rexroth IndraDrive Cs system
- Specification applying to all components (ambient and operating conditions)
- Application description of system characteristics

Editions

Edition	Notes
05	Changes in comparison to previous edition: *Revised contents* • Added technical data (inverter power section) for HCS01.1E-W0013 • Analog current input (DA option): Updated electrical data
04	Changes in comparison to previous edition: *New contents* • External braking resistors: – HLR01.2N-0K06-N100R-E-003-NNNN – HLR01.2N-0K06-N180R-E-007-NNNN • SB option (Safe Motion Bus) • EP option (Engineering interface) • SUP-E02-MSM-BATTERYBOX-xxxx battery box accessory • Encoder cable for MSM motors with M5 absolute value encoder (RKG0065) *Revised contents* • Updated type code • HCS01.1E-W0018-A02 (inverter data): Frequency-dependent output currents • HAS09.1-001 (module bus cable shield connection) accessory • Updated encoder emulation data • Removed HAP01.1E standard control panel

Edition	Notes
03	Changes in comparison to previous edition: *New contents* • Safety technology Safe Motion (optional module S4) • Analog/digital I/O extension (optional module DA) • HAS05.1-015-NNN-NN (snap-on ferrite) accessory *Revised contents* • Type code – HCS01 – HLR01 • Revised information on fuses for individual and group supply • Dimensioning of line cross sections and fuses: Revised recommendations for fuses • On-board connection point X24/X25 • Revised data tables of inputs/outputs (digital, analog)

System presentation

Edition	Notes
02	Changes in comparison to previous edition: *New contents* • HCS01.1E-W0054-_-03 • HCS01.1E-W0018-_-02 • Safety technology (L3, L4) • Encoder emulation (EM) • CANopen (CN) communication • SHL03.1-NNN-S-NNN Hall sensor adapter box • RKG0041 encoder cable • D-Sub connector RGS0001/K01 for encoder cable and battery connection • HLR01.2 braking resistors • HLC01.2 DC bus capacitor units • Transformers • ADVANCED control panel • Third-party motors • Tightening torques of the connection points • EtherCAT display elements *Revised contents* • Type code • Technical data • Project planning for control voltage supply • DC bus coupling • Mains filter: Dimensioning and selection • Standard encoder evaluation • Connection diagram for HIPERFACE encoder • HAS09 mounting and connection accessories • SUP-E03-DKC*CS-BATTRY accessory • Control cabinet cooling • Overview of documentations
01	First edition

Tab. 1-11: Editions

Documentations

Drive systems, system components

Title Rexroth IndraDrive …	Type of documentation	Document typecode[1)] DOK-INDRV*-…	Material number R911…
Cs drive systems	Project Planning Manual	HCS01******-PRxx-EN-P	322210

1) In the document typecodes, "xx" is a placeholder for the current edition of the documentation (e.g.: PR01 is the first edition of a Project Planning Manual)

Tab. 1-12: Documentations – drive systems, system components

Motors

Title Rexroth IndraDyn …	Type of documentation	Document typecode[1)] DOK-MOTOR*-…	Material number R911…
A Asynchronous Motors MAD / MAF	Project Planning Manual	MAD/MAF****-PRxx-EN-P	295781
H Synchronous Kit Spindle Motors	Project Planning Manual	MBS-H******-PRxx-EN-P	297895
L Synchronous Linear Motors	Project Planning Manual	MLF********-PRxx-EN-P	293635
L Ironless Linear Motors MCL	Project Planning Manual	MCL********-PRxx-EN-P	330592
S Synchronous Motors MKE	Project Planning Manual	MKE*GEN2***-PRxx-EN-P	297663
S Synchronous Motors MSK	Project Planning Manual	MSK********-PRxx-EN-P	296289
S Synchronous Motors MSM	Data Sheet	MSM********-DAxx-EN-P	329338
S Synchronous Motors MS2N	Project Planning Manual	MS2N*******-PRxx-EN-P	347583
T Synchronous Torque Motors	Project Planning Manual	MBT********-PRxx-EN-P	298798

1) In the document typecodes, "xx" is a placeholder for the current edition of the documentation (e.g.: PR01 is the first edition of a Project Planning Manual)

Tab. 1-13: Documentations – motors

Cables

Title	Type of documentation	Document typecode[1)] DOK-CONNEC-…	Material number R911…
Rexroth Connection Cables IndraDrive and IndraDyn	Selection Data	CABLE*INDRV-CAxx-EN-P	322949

1) In the document typecodes, "xx" is a placeholder for the current edition of the documentation (e.g.: CA03 is the third edition of the documentation "Catalog")

Tab. 1-14: Documentations – cables

Firmware

Title Rexroth IndraDrive ...	Type of documentation	Document typecode[1)] DOK-INDRV*-…	Material number R911…
MPx-20 Functions	Application Manual	MP*-20VRS**-APxx-EN-P	345608
MPx-20 Version Notes	Release Notes	MP*-20VRS**-RNxx-EN-P	345606
MPx-18 Functions	Application Manual	MP*-18VRS**-APxx-EN-P	338673
MPx-18 Version Notes	Release Notes	MP*-18VRS**-RNxx-EN-P	338658
MPx-17 Functions	Application Manual	MP*-17VRS**-APxx-EN-P	331236
MPx-17 Version Notes	Release Notes	MP*-17VRS**-RNxx-EN-P	331588
MPx-16 Functions	Application Manual	MP*-16VRS**-APxx-EN-P	326767
MPx-16 Version Notes	Release Notes	MP*-16VRS**-RNxx-EN-P	329272
MPx-16 to MPx-18 Parameters	Reference Book	GEN1-PARA**-RExx-EN-P	328651
MPx-16 to MPx-18 Diagnostic Messages	Reference Book	GEN1-DIAG**-RExx-EN-P	326738
Integrated Safety Technology as of MPx-1x	Application Manual	SI3-**VRS**-APxx-EN-P	332634
Integrated Safety Technology as of MPx-1x (Safe Motion)	Application Manual	SI3*SMO-VRS-APxx-EN-P	338920
Rexroth IndraMotion MLD Libraries as of MPx-17	Reference Book	MLD-SYSLIB2-RExx-EN-P	332627
Rexroth IndraMotion MLD Libraries as of MPx-18	Reference Book	MLD-SYSLIB3-RExx-EN-P	338916
Rexroth IndraMotion MLD as of MPx-17	Application Manual	MLD2-**VRS*-APxx-EN-P	334351
Rexroth IndraMotion MLD as of MPx-18	Application Manual	MLD3-**VRS*-APRS-EN-P	338914

1) In the document typecodes, "xx" is a placeholder for the current edition of the documentation (e.g.: RE02 is the second edition of a Reference Book)

Tab. 1-15: Documentations – firmware

Your feedback

☞ Your experience is important for our improvement processes of products and documentations.

Inform us about mistakes you discovered in this documentation and changes you suggest; we would be grateful for your feedback.

Please send your remarks to:

Address for your feedback

Bosch Rexroth AG

Dept. DC-IA/EDY1

Buergermeister-Dr.-Nebel-Str. 2

97816 Lohr, Germany

E-mail: dokusupport@boschrexroth.de

2 Important directions for use

2.1 Appropriate use

2.1.1 Introduction

Rexroth products represent state-of-the-art developments and manufacturing. They are tested prior to delivery to ensure operating safety and reliability.

⚠ WARNING **Personal injury and property damage caused by incorrect use of the products!**

The products have been designed for use in the industrial environment and may only be used in the appropriate way. If they are not used in the appropriate way, situations resulting in property damage and personal injury can occur.

☞ Rexroth as manufacturer is not liable for any damages resulting from inappropriate use. In such cases, the guarantee and the right to payment of damages resulting from inappropriate use are forfeited. The user alone carries all responsibility of the risks.

Before using Rexroth products, make sure that all the pre-requisites for an appropriate use of the products are satisfied:

- Personnel that in any way, shape or form uses our products must first read and understand the relevant safety instructions and be familiar with their appropriate use.
- If the products take the form of hardware, then they must remain in their original state, in other words, no structural changes are permitted. It is not permitted to decompile software products or alter source codes.
- Do not install damaged or faulty products or put them into operation.
- Make sure that the products have been installed in the manner described in the relevant documentation.

2.1.2 Areas of use and application

Drive controllers made by Rexroth are designed to control electric motors and monitor their operation.

Control and monitoring of the Drive controllers may require additional sensors and actuators.

☞ The drive controllers may only be used with the accessories and parts specified in this documentation. If a component has not been specifically named, then it may neither be mounted nor connected. The same applies to cables and lines.

Operation is only permitted in the specified configurations and combinations of components using the software and firmware as specified in the relevant Functional Descriptions.

Drive controllers have to be programmed before commissioning to ensure that the motor executes the specific functions of an application.

Drive controllers of the Rexroth IndraDrive Cs series have been developed for use in single- and multi-axis drive and control tasks.

To ensure application-specific use of Drive controllers, device types of different drive power and different interfaces are available.

Typical applications include, for example:

- Handling and mounting systems
- Packaging and food machines
- Printing and paper processing machines
- Machine tools

Drive controllers may only be operated under the assembly and installation conditions described in this documentation, in the specified position of normal use and under the ambient conditions as described (temperature, degree of protection, humidity, EMC, etc.).

2.2 Inappropriate use

Using the Drive controllers outside of the operating conditions described in this documentation and outside of the indicated technical data and specifications is defined as "inappropriate use".

Drive controllers may not be used, if …

- they are subject to operating conditions that do not meet the specified ambient conditions. This includes, for example, operation under water, under extreme temperature fluctuations or extremely high maximum temperatures.
- Furthermore, Drive controllers may not be used in applications which have not been expressly authorized by Rexroth. Please carefully follow the specifications outlined in the general Safety Instructions!

☞ Components of the Rexroth IndraDrive Cs system are **products of Category C3** (with restricted distribution) in accordance with IEC 61800-3. This Category comprises EMC limit values for line-based and radiated noise emission. Compliance with this Category (limit values) requires the appropriate measures of interference suppression to be used in the drive system (e.g., mains filters, shielding measures).

These components are not provided for use in a public low-voltage mains supplying residential areas. If these components are used in such a mains, high-frequency interference is to be expected. This can require additional measures of interference suppression.

---

3 Safety instructions for electric drives and controls

3.1 Definitions of terms

Application documentation
Application documentation comprises the entire documentation used to inform the user of the product about the use and safety-relevant features for configuring, integrating, installing, mounting, commissioning, operating, maintaining, repairing and decommissioning the product. The following terms are also used for this kind of documentation: Operating Instructions, Commissioning Manual, Instruction Manual, Project Planning Manual, Application Description, etc.

Component
A component is a combination of elements with a specified function, which are part of a piece of equipment, device or system. Components of the electric drive and control system are, for example, supply units, drive controllers, mains choke, mains filter, motors, cables, etc.

Control system
A control system comprises several interconnected control components placed on the market as a single functional unit.

Device
A device is a finished product with a defined function, intended for users and placed on the market as an individual piece of merchandise.

Electrical equipment
Electrical equipment encompasses all devices used to generate, convert, transmit, distribute or apply electrical energy, such as electric motors, transformers, switching devices, cables, lines, power-consuming devices, circuit board assemblies, plug-in units, control cabinets, etc.

Electric drive system
An electric drive system comprises all components from mains supply to motor shaft; this includes, for example, electric motor(s), motor encoder(s), supply units and drive controllers, as well as auxiliary and additional components, such as mains filter, mains choke and the corresponding lines and cables.

Installation
An installation consists of several devices or systems interconnected for a defined purpose and on a defined site which, however, are not intended to be placed on the market as a single functional unit.

Machine
A machine is the entirety of interconnected parts or units at least one of which is movable. Thus, a machine consists of the appropriate machine drive elements, as well as control and power circuits, which have been assembled for a specific application. A machine is, for example, intended for processing, treatment, movement or packaging of a material. The term "machine" also covers a combination of machines which are arranged and controlled in such a way that they function as a unified whole.

Manufacturer
The manufacturer is an individual or legal entity bearing responsibility for the design and manufacture of a product which is placed on the market in the individual's or legal entity's name. The manufacturer can use finished products, finished parts or finished elements, or contract out work to subcontractors. However, the manufacturer must always have overall control and possess the required authority to take responsibility for the product.

Product
Examples of a product: Device, component, part, system, software, firmware, among other things.

Project Planning Manual
A Project Planning Manual is part of the application documentation used to support the sizing and planning of systems, machines or installations.

Qualified persons
In terms of this application documentation, qualified persons are those persons who are familiar with the installation, mounting, commissioning and operation of the components of the electric drive and control system, as well as with the hazards this implies, and who possess the qualifications their work

requires. To comply with these qualifications, it is necessary, among other things,

- to be trained, instructed or authorized to switch electric circuits and devices safely on and off, to ground them and to mark them.
- to be trained or instructed to maintain and use adequate safety equipment.
- to attend a course of instruction in first aid.

User A user is a person installing, commissioning or using a product which has been placed on the market.

3.2 General information

3.2.1 Using the Safety instructions and passing them on to others

Do not attempt to install and operate the components of the electric drive and control system without first reading all documentation provided with the product. Read and understand these safety instructions and all user documentation prior to working with these components. If you do not have the user documentation for the components, contact your responsible Rexroth sales partner. Ask for these documents to be sent immediately to the person or persons responsible for the safe operation of the components.

If the component is resold, rented and/or passed on to others in any other form, these safety instructions must be delivered with the component in the official language of the user's country.

Improper use of these components, failure to follow the safety instructions in this document or tampering with the product, including disabling of safety devices, could result in property damage, injury, electric shock or even death.

3.2.2 Requirements for safe use

Read the following instructions before initial commissioning of the components of the electric drive and control system in order to eliminate the risk of injury and/or property damage. You must follow these safety instructions.

- Rexroth is not liable for damages resulting from failure to observe the safety instructions.
- Read the operating, maintenance and safety instructions in your language before commissioning. If you find that you cannot completely understand the application documentation in the available language, please ask your supplier to clarify.
- Proper and correct transport, storage, mounting and installation, as well as care in operation and maintenance, are prerequisites for optimal and safe operation of the component.
- Only qualified persons may work with components of the electric drive and control system or within its proximity.
- Only use accessories and spare parts approved by Rexroth.
- Follow the safety regulations and requirements of the country in which the components of the electric drive and control system are operated.
- Only use the components of the electric drive and control system in the manner that is defined as appropriate. See chapter "Appropriate Use".
- The ambient and operating conditions given in the available application documentation must be observed.

- Applications for functional safety are only allowed if clearly and explicitly specified in the application documentation "Integrated Safety Technology". If this is not the case, they are excluded. Functional safety is a safety concept in which measures of risk reduction for personal safety depend on electrical, electronic or programmable control systems.
- The information given in the application documentation with regard to the use of the delivered components contains only examples of applications and suggestions.

  The machine and installation manufacturers must
  - make sure that the delivered components are suited for their individual application and check the information given in this application documentation with regard to the use of the components,
  - make sure that their individual application complies with the applicable safety regulations and standards and carry out the required measures, modifications and complements.
- Commissioning of the delivered components is only allowed once it is sure that the machine or installation in which the components are installed complies with the national regulations, safety specifications and standards of the application.
- Operation is only allowed if the national EMC regulations for the application are met.
- The instructions for installation in accordance with EMC requirements can be found in the section on EMC in the respective application documentation.

  The machine or installation manufacturer is responsible for compliance with the limit values as prescribed in the national regulations.
- The technical data, connection and installation conditions of the components are specified in the respective application documentations and must be followed at all times.

National regulations which the user has to comply with

- European countries: In accordance with European EN standards
- United States of America (USA):
  - National Electrical Code (NEC)
  - National Electrical Manufacturers Association (NEMA), as well as local engineering regulations
  - Regulations of the National Fire Protection Association (NFPA)
- Canada: Canadian Standards Association (CSA)
- Other countries:
  - International Organization for Standardization (ISO)
  - International Electrotechnical Commission (IEC)

3.2.3 Hazards by improper use

- High electrical voltage and high working current! Danger to life or serious injury by electric shock!
- High electrical voltage by incorrect connection! Danger to life or injury by electric shock!
- Dangerous movements! Danger to life, serious injury or property damage by unintended motor movements!

- Health hazard for persons with heart pacemakers, metal implants and hearing aids in proximity to electric drive systems!
- Risk of burns by hot housing surfaces!
- Risk of injury by improper handling! Injury by crushing, shearing, cutting, hitting!
- Risk of injury by improper handling of batteries!
- Risk of injury by improper handling of pressurized lines!

3.3 Instructions with regard to specific dangers

3.3.1 Protection against contact with electrical parts and housings

☞ This section concerns components of the electric drive and control system with voltages of **more than 50 volts**.

Contact with parts conducting voltages above 50 volts can cause personal danger and electric shock. When operating components of the electric drive and control system, it is unavoidable that some parts of these components conduct dangerous voltage.

High electrical voltage! Danger to life, risk of injury by electric shock or serious injury!

- Only qualified persons are allowed to operate, maintain and/or repair the components of the electric drive and control system.
- Follow the general installation and safety regulations when working on power installations.
- Before switching on, the equipment grounding conductor must have been permanently connected to all electric components in accordance with the connection diagram.
- Even for brief measurements or tests, operation is only allowed if the equipment grounding conductor has been permanently connected to the points of the components provided for this purpose.
- Before accessing electrical parts with voltage potentials higher than 50 V, you must disconnect electric components from the mains or from the power supply unit. Secure the electric component from reconnection.
- With electric components, observe the following aspects:

  Always wait **30 minutes** after switching off power to allow live capacitors to discharge before accessing an electric component. Measure the electrical voltage of live parts before beginning to work to make sure that the equipment is safe to touch.
- Install the covers and guards provided for this purpose before switching on.
- Never touch any electrical connection points of the components while power is turned on.
- Do not remove or plug in connectors when the component has been powered.
- Under specific conditions, electric drive systems can be operated at mains protected by residual-current-operated circuit-breakers sensitive to universal current (RCDs/RCMs).

- Secure built-in devices from penetrating foreign objects and water, as well as from direct contact, by providing an external housing, for example a control cabinet.

High housing voltage and high leakage current! Danger to life, risk of injury by electric shock!

- Before switching on and before commissioning, ground or connect the components of the electric drive and control system to the equipment grounding conductor at the grounding points.
- Connect the equipment grounding conductor of the components of the electric drive and control system permanently to the main power supply at all times. The leakage current is greater than 3.5 mA.
- Establish an equipment grounding connection with a minimum cross section according to the table below. With an outer conductor cross section smaller than 10 mm^2 (8 AWG), the alternative connection of two equipment grounding conductors is allowed, each having the same cross section as the outer conductors.

Cross section outer conductor	Minimum cross section equipment grounding conductor Leakage current ≥ 3.5 mA	
	1 equipment grounding conductor	2 equipment grounding conductors
1.5 mm^2 (16 AWG)	10 mm^2 (8 AWG)	2 × 1.5 mm^2 (16 AWG)
2.5 mm^2 (14 AWG)		2 × 2.5 mm^2 (14 AWG)
4 mm^2 (12 AWG)		2 × 4 mm^2 (12 AWG)
6 mm^2 (10 AWG)		2 × 6 mm^2 (10 AWG)
10 mm^2 (8 AWG)		-
16 mm^2 (6 AWG)	16 mm^2 (6 AWG)	-
25 mm^2 (4 AWG)		-
35 mm^2 (2 AWG)		-
50 mm^2 (1/0 AWG)	25 mm^2 (4 AWG)	-
70 mm^2 (2/0 AWG)	35 mm^2 (2 AWG)	-
...	...	...

Tab. 3-1: Minimum cross section of the equipment grounding connection

3.3.2 Protective extra-low voltage as protection against electric shock

Protective extra-low voltage is used to allow connecting devices with basic insulation to extra-low voltage circuits.

On components of an electric drive and control system provided by Rexroth, all connections and terminals with voltages up to 50 volts are PELV ("Protective Extra-Low Voltage") systems. It is allowed to connect devices equipped with basic insulation (such as programming devices, PCs, notebooks, display units) to these connections.

Danger to life, risk of injury by electric shock! High electrical voltage by incorrect connection!

If extra-low voltage circuits of devices containing voltages and circuits of more than 50 volts (e.g., the mains connection) are connected to Rexroth products, the connected extra-low voltage circuits must comply with the requirements for PELV ("Protective Extra-Low Voltage").

3.3.3 Protection against dangerous movements

Dangerous movements can be caused by faulty control of connected motors. Some common examples are:

- Improper or wrong wiring or cable connection
- Operator errors
- Wrong input of parameters before commissioning
- Malfunction of sensors and encoders
- Defective components
- Software or firmware errors

These errors can occur immediately after equipment is switched on or even after an unspecified time of trouble-free operation.

The monitoring functions in the components of the electric drive and control system will normally be sufficient to avoid malfunction in the connected drives. Regarding personal safety, especially the danger of injury and/or property damage, this alone cannot be relied upon to ensure complete safety. Until the integrated monitoring functions become effective, it must be assumed in any case that faulty drive movements will occur. The extent of faulty drive movements depends upon the type of control and the state of operation.

Dangerous movements! Danger to life, risk of injury, serious injury or property damage!

A **risk assessment** must be prepared for the installation or machine, with its specific conditions, in which the components of the electric drive and control system are installed.

As a result of the risk assessment, the user must provide for monitoring functions and higher-level measures on the installation side for personal safety. The safety regulations applicable to the installation or machine must be taken into consideration. Unintended machine movements or other malfunctions are possible if safety devices are disabled, bypassed or not activated.

To avoid accidents, injury and/or property damage:

- Keep free and clear of the machine’s range of motion and moving machine parts. Prevent personnel from accidentally entering the machine’s range of motion by using, for example:
  - Safety fences
  - Safety guards
  - Protective coverings
  - Light barriers
- Make sure the safety fences and protective coverings are strong enough to resist maximum possible kinetic energy.
- Mount emergency stopping switches in the immediate reach of the operator. Before commissioning, verify that the emergency stopping equip-

ment works. Do not operate the machine if the emergency stopping switch is not working.

- Prevent unintended start-up. Isolate the drive power connection by means of OFF switches/OFF buttons or use a safe starting lockout.
- Make sure that the drives are brought to safe standstill before accessing or entering the danger zone.
- Additionally secure vertical axes against falling or dropping after switching off the motor power by, for example,
  - mechanically securing the vertical axes,
  - adding an external braking/arrester/clamping mechanism or
  - ensuring sufficient counterbalancing of the vertical axes.
- The standard equipment **motor holding brake** or an external holding brake controlled by the drive controller is **not sufficient to guarantee personal safety**!
- Disconnect electrical power to the components of the electric drive and control system using the master switch and secure them from reconnection ("lock out") for:
  - Maintenance and repair work
  - Cleaning of equipment
  - Long periods of discontinued equipment use
- Prevent the operation of high-frequency, remote control and radio equipment near components of the electric drive and control system and their supply leads. If the use of these devices cannot be avoided, check the machine or installation, at initial commissioning of the electric drive and control system, for possible malfunctions when operating such high-frequency, remote control and radio equipment in its possible positions of normal use. It might possibly be necessary to perform a special electromagnetic compatibility (EMC) test.

3.3.4 Protection against electromagnetic and magnetic fields during operation and mounting

Electromagnetic and magnetic fields!

Health hazard for persons with active implantable medical devices (AIMD) such as pacemakers or passive metallic implants.

- Hazards for the above-mentioned groups of persons by electromagnetic and magnetic fields in the immediate vicinity of drive controllers and the associated current-carrying conductors.
- Entering these areas can pose an increased risk to the above-mentioned groups of persons. They should seek advice from their physician.
- If overcome by possible effects on above-mentioned persons during operation of drive controllers and accessories, remove the exposed persons from the vicinity of conductors and devices.

3.3.5 Protection against contact with hot parts

Hot surfaces of components of the electric drive and control system. Risk of burns!

- Do not touch hot surfaces of, for example, braking resistors, heat sinks, supply units and drive controllers, motors, windings and laminated cores!
- According to the operating conditions, temperatures of the surfaces can be **higher than 60 °C** (140 °F) during or after operation.
- Before touching motors after having switched them off, let them cool down for a sufficient period of time. Cooling down can require **up to 140 minutes**! The time required for cooling down is approximately five times the thermal time constant specified in the technical data.
- After switching chokes, supply units and drive controllers off, wait **15 minutes** to allow them to cool down before touching them.
- Wear safety gloves or do not work at hot surfaces.
- For certain applications, and in accordance with the respective safety regulations, the manufacturer of the machine or installation must take measures to avoid injuries caused by burns in the final application. These measures can be, for example: Warnings at the machine or installation, guards (shieldings or barriers) or safety instructions in the application documentation.

3.3.6 Protection during handling and mounting

Risk of injury by improper handling! Injury by crushing, shearing, cutting, hitting!

- Observe the relevant statutory regulations of accident prevention.
- Use suitable equipment for mounting and transport.
- Avoid jamming and crushing by appropriate measures.
- Always use suitable tools. Use special tools if specified.
- Use lifting equipment and tools in the correct manner.
- Use suitable protective equipment (hard hat, safety goggles, safety shoes, safety gloves, for example).
- Do not stand under hanging loads.
- Immediately clean up any spilled liquids from the floor due to the risk of falling!

3.3.7 Battery safety

Batteries consist of active chemicals in a solid housing. Therefore, improper handling can cause injury or property damage.

Risk of injury by improper handling!

- Do not attempt to reactivate low batteries by heating or other methods (risk of explosion and cauterization).
- Do not attempt to recharge the batteries as this may cause leakage or explosion.
- Do not throw batteries into open flames.
- Do not dismantle batteries.
- When replacing the battery/batteries, do not damage the electrical parts installed in the devices.
- Only use the battery types specified for the product.

☞ Environmental protection and disposal! The batteries contained in the product are considered dangerous goods during land, air, and sea transport (risk of explosion) in the sense of the legal regulations. Dispose of used batteries separately from other waste. Observe the national regulations of your country.

3.3.8 Protection against pressurized systems

According to the information given in the Project Planning Manuals, motors and components cooled with liquids and compressed air can be partially supplied with externally fed, pressurized media, such as compressed air, hydraulics oil, cooling liquids and cooling lubricants. Improper handling of the connected supply systems, supply lines or connections can cause injuries or property damage.

Risk of injury by improper handling of pressurized lines!

- Do not attempt to disconnect, open or cut pressurized lines (risk of explosion).
- Observe the respective manufacturer's operating instructions.
- Before dismounting lines, relieve pressure and empty medium.
- Use suitable protective equipment (safety goggles, safety shoes, safety gloves, for example).
- Immediately clean up any spilled liquids from the floor due to the risk of falling!

☞ Environmental protection and disposal! The agents (e.g., fluids) used to operate the product might not be environmentally friendly. Dispose of agents harmful to the environment separately from other waste. Observe the national regulations of your country.

3.4 Explanation of signal words and the Safety alert symbol

The Safety Instructions in the available application documentation contain specific signal words (DANGER, WARNING, CAUTION or NOTICE) and, where required, a safety alert symbol (in accordance with ANSI Z535.6-2011).

The signal word is meant to draw the reader's attention to the safety instruction and identifies the hazard severity.

The safety alert symbol (a triangle with an exclamation point), which precedes the signal words DANGER, WARNING and CAUTION, is used to alert the reader to personal injury hazards.

⚠ DANGER

In case of non-compliance with this safety instruction, death or serious injury **will** occur.

⚠ WARNING

In case of non-compliance with this safety instruction, death or serious injury **could** occur.

⚠ CAUTION

In case of non-compliance with this safety instruction, minor or moderate injury could occur.

NOTICE

In case of non-compliance with this safety instruction, property damage could occur.

4 Combining the individual components

4.1 Documentations

See chapter "Documentations" on page 25

4.2 Brief description of individual components

4.2.1 HCS01 - brief description and design

Brief description

The compact converters HCS01 are part of the Rexroth IndraDrive Cs product range and are used to operate Rexroth IndraDyn motors or third-party motors.

HCS01 types:

- **02:** Mains connection voltage **3 AC 110 … 230 V**
- **03:** Mains connection voltage **3 AC 200 … 500 V**

Design, block diagram

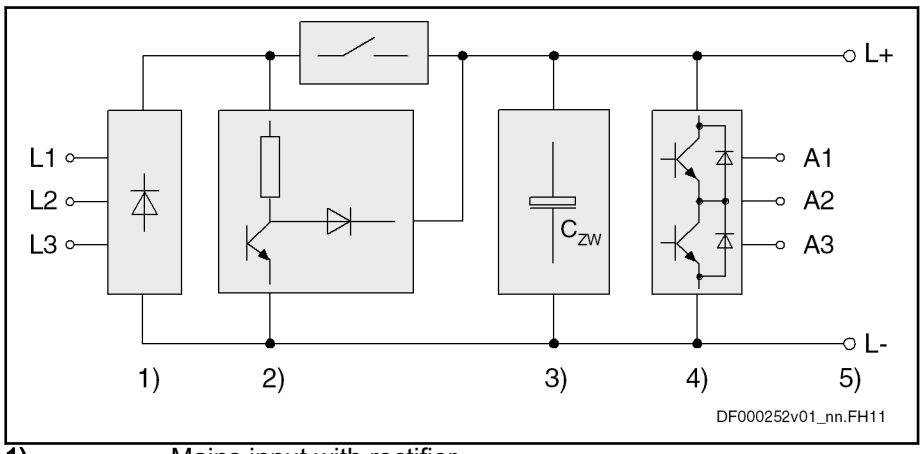

1) Mains input with rectifier
2) Braking resistor circuit; charging current limitation
3) DC bus capacitances
4) Inverter stage with output to motor
5) DC bus connection

Fig. 4-1: HCS01 block diagram

4.3 Configuring the drive system

4.3.1 Converter

The selection of the appropriate converter depends on

- Mains type
- Mains Voltage
- Mains supply (1-phase or 3-phase)

Combining the individual components

Mains Type and Mains Voltage

IT mains Mains grounded via outer conductor		TN-S mains TN-C mains TT mains
Mains voltage ≤ 3 AC 230V	Mains voltage 3 AC 230 … 500 V	To be noticed with 1-phase mains voltage: See table "Mains Supply"
No transformer required	Isolating transformer with grounded neutral point required	
HCS01.1E-W0003-A-**02** HCS01.1E-W0006-A-**02** HCS01.1E-W0009-A-**02** HCS01.1E-W0013-A-**02** HCS01.1E-W0018-A-**02** HCS01.1E-W0005-A-**03** HCS01.1E-W0008-A-**03** HCS01.1E-W0018-A-**03** HCS01.1E-W0028-A-**03** HCS01.1E-W0054-A-**03**	HCS01.1E-W0005-A-**03** HCS01.1E-W0008-A-**03** HCS01.1E-W0018-A-**03** HCS01.1E-W0028-A-**03** HCS01.1E-W0054-A-**03**	HCS01.1E-W0003-A-**02** HCS01.1E-W0006-A-**02** HCS01.1E-W0009-A-**02** HCS01.1E-W0013-A-**02** HCS01.1E-W0018-A-**02** HCS01.1E-W0005-A-**03** HCS01.1E-W0008-A-**03** HCS01.1E-W0018-A-**03** HCS01.1E-W0028-A-**03** HCS01.1E-W0054-A-**03**

Tab. 4-1: Mains Type and Mains Voltage

Mains Supply

1-phase[1)]	3-phase	
1 AC 110 … 230 V	3 AC 200 ... 500 V	
	Autotransformer	-
	3 AC 110 … 230 V	-
HCS01.1E-W0003-A-**02** HCS01.1E-W0006-A-**02** HCS01.1E-W0009-A-**02** HCS01.1E-W0013-A-**02** HCS01.1E-W0018-A-**02**		HCS01.1E-W0005-A-**03** HCS01.1E-W0008-A-**03** HCS01.1E-W0018-A-**03** HCS01.1E-W0028-A-**03** HCS01.1E-W0054-A-**03**
Mains supply		
Individual supply		Individual supply
		Group supply
		Central supply

1) With 1-phase mains supply, you can connect the mains supply line to connector X3 at L1, L2 or L3

Tab. 4-2: Mains Supply

DC bus coupling

If energy compensation is to be available between the individual devices, the DC buses of these devices must be coupled. DC bus coupling restricts the selection of HCS01 converters.

See also chapter 4.6.4 "DC bus coupling" on page 105.

4.3.2 Functional equipment

HCS01 - ECONOMY vs. BASIC vs. ADVANCED

Functional equipment	HCS01.1E-W00**-A-0*-…		
	…E-S3 (ECONOMY)	…B-ET (BASIC)	…A-CC, …A-ET (ADVANCED)
Communication	sercos III / EtherCAT	Multi-Ethernet (incl. sercos III)	CC: sercos III master (cross communication) ET: Multi-Ethernet
		Alternative interface[1)] (PROFIBUS DP, CANopen)[2)]	Alternative interface[1)] (Multi-Ethernet, PROFIBUS DP, CANopen)
Encoder evaluation	Multi-encoder interface	Multi-encoder interface	Multi-encoder interface
		Optional multi-encoder interface[1)]	Optional multi-encoder interface[1)]
Encoder emulation	–	✓	✓
Integrated safety technology	L3 (Safe Torque Off) L4 (Safe Torque Off, Safe Brake Control)	L3 (Safe Torque Off) L4 (Safe Torque Off, Safe Brake Control) S4 (Safe Motion) S5 (Safe Motion) SB (Safe Motion Bus)	L3 (Safe Torque Off) L4 (Safe Torque Off, Safe Brake Control) S4 (Safe Motion) S5 (Safe Motion) SB (Safe Motion Bus)
IndraMotion	–	MLD-S[3)]	MLD-S[3)] MLD-M[3)]
Freely configurable digital inputs/outputs (incl. probe)	✓	✓	✓
Analog input	✓	✓	✓
Control panel			
• With programming module function	✓	✓	✓
• With slot for microSD memory card	✓	✓	✓
Optional I/O extension digital/analog	✓	✓	✓
Engineering Port	✓	✓	✓

1) **One** additional interface per converter for communication **or** encoder evaluation

2) If you use "PROFIBUS DP" or "CANopen" communication, the Multi-Ethernet function is no longer available. However, you can still use the connection points X24 and X25 as Engineering interfaces.

3) Firmware version MPx-17 or higher

Tab. 4-3: ECONOMY vs. BASIC vs. ADVANCED

Combining the individual components

4.3.3 Firmware

Firmware and device types

Device type	Firmware
HCS01.1E-W00**-A-0*-**E-S3** (ECONOMY)	FWA-INDRV*-MP**E-16**VRS-D5-x-NNN-NN FWA-INDRV*-MP**E-17**VRS-D5-x-NNN-NN FWA-INDRV*-MP**E-18**VRS-D5-x-NNN-NN FWA-INDRV*-MP**E-20**VRS-D5-x-NNN-NN
HCS01.1E-W00**-A-0*-**B-ET** (BASIC)	FWA-INDRV*-MP**B-16**VRS-D5-x-xxx-xx FWA-INDRV*-MP**B-17**VRS-D5-x-xxx-xx FWA-INDRV*-MP**B-18**VRS-D5-x-xxx-xx FWA-INDRV*-MP**B-20**VRS-D5-x-xxx-xx
HCS01.1E-W00**-A-0*-**A-CC** (ADVANCED)	FWA-INDRV*-MP**C-17**VRS-D5-x-xxx-xx FWA-INDRV*-MP**C-18**VRS-D5-x-xxx-xx FWA-INDRV*-MP**C-20**VRS-D5-x-xxx-xx
HCS01.1E-W00**-A-0*-**A-ET** (ADVANCED)	FWA-INDRV*-MP**C-20**VRS-D5-x-xxx-xx

Tab. 4-4: Device types and firmware

Firmware types

Structure of the firmware type designation

The type designation of the firmware consists of the following type code elements:

Firmware	Base package of variant ...	Version	Release	Language	Characteristic Open-loop / Closed-loop	Alternative expansion packages	Additive expansion packages
FWA-INDRV*-	MP**E**-	16	VRS-	D5-	x-	NNN-	NN
		17					
		18					
		20					
FWA-INDRV*-	MP**B**-	16	VRS-	D5-	x-	xxx-	xx
		17					
		18					
		20					
FWA-INDRV*-	MP**C**-	17	VRS-	D5-	x-	xxx-	xx
		18					
		20					

Tab. 4-5: Basic structure of the firmware type designation

Function-specific abbreviations in type designation of firmware

Base package *(application and performance)*

- **MPE** → Firmware with ECONOMY performance and ECONOMY functionality

- MPB → Firmware with BASIC performance and BASIC functionality
- MPC → Firmware with ADVANCED performance and ADVANCED functionality

Characteristic (open-loop/closed-loop)

- 0 → Open-loop
- 1 → Closed-loop

Alternative expansion packages

- NNN → No alternative expansion package
- SRV → Functional package "Servo function"
- SNC → Functional package "Synchronization"
- MSP → Functional package "Main spindle"
- ALL → All alternative expansion packages

Additive expansion packages

- NN → No additive expansion package
- MA → IndraMotion MLD Advanced (for MPB, MPC firmware only)
- ML → IndraMotion MLD for free programming; incl. use of technology functions (for MPB, MPC firmware)

☞ The Rexroth sales representative in charge will help you with the currently available firmware types.

📖 For detailed information, see the Functional Description of the firmware used (index entry "Overview of functions/functional packages").

Firmware variants

MPx-xxVRS

Firmware variant →		MPE[1)]		MPB		MPC	
Firmware characteristic →		OL	CL	OL	CL	OL	CL
Base package	Basic functions	■	■	■	■	■	■
	Base package "open-loop"	■	■	■	■	■	■
	Base package "closed-loop"	-	■	-	■	-	■
Alternative functional packages	Servo function	-	-	-	■	-	■
	Synchronization	-	-	■	■	■	■
	Main spindle	-	[2)]	■	■	■	■
Additive functional package	IndraMotion MLD	-	-	■	■	■	■

MPE Single-axis firmware with Economy performance
MPB Single-axis firmware with Basic performance
MPC Single-axis firmware with Advanced performance
OL Open-loop characteristic
CL Closed-loop characteristic
1) For Economy firmware MPE, there is only one expanded base package available
2) The expanded base package contains the "parameter set switching" function.

Tab. 4-6: Dependance of functional packages on hardware and firmware variant

4.3.4 Motors

IndraDyn

The table below contains an overview of the combinations of MSM motors with HCS01 converters.

Motor	HCS01									
	Size 1							Size 2		Size 3
	3 AC 110 … 230 V					3 AC 200 … 500 V				
	W0003	W0006	W0009	W0013	W0018	W0005	W0008	W0018	W0028	W0054
MSM019A	■	□	□	□	-	T	T	-	-	-
MSM019B	■	□	□	□	-	T	T	-	-	-
MSM031B	×	■	□	□	-	T	T	-	-	-
MSM031C	-	×	■	□	-	T	T	-	-	-
MSM041B	-	-	×	■	□	-	T	T	-	-

■ Optimum combination
□ Allowed combination (converter overdimensioned)
× Allowed combination (motor overdimensioned)
T Allowed combination (transformer required, as operation of MSM motors only allowed with a maximum of 3 AC 230 V)
- Combination not allowed

Tab. 4-7: Combination of HCS01 converters and MSM motors

Third-Party Motors

General Information on Third-Party Motors

Why Use Third-Party Motors at Rexroth IndraDrive Cs Controllers?

Today, machine axes are mainly moved with electric drives. Motors of standard design are used in most cases, as this is the most cost-efficient solution.

Special Requirements

Due to special requirements at machine axes, constructional or safety-related aspects, it may be necessary for the machine manufacturer to use a motor construction diverging from the standard.

Motor Design not Included in Product Range

For these cases, there is the demand on drive suppliers to realize drives with motors that are not included in their own product ranges due to the special design.

Check Before Using Third-Party Motors

At drive controllers of the Rexroth IndraDrive Cs range, it is possible to use third-party motors. For this purpose, check whether the third-party motor complies with the requirements of use.

The Functional Description of the firmware contains forms for motor data. Procure the completed forms for the performance test of a third-party motor.

Which are the Important Directives?

In accordance with the legal regulations (EU Directive EMC 89/336/EEC and the German EMC laws), installations and machines must be designed and built in accordance with the present state-of-the-art of standardization.

In order to comply with the machine directives regarding "electromagnetic compatibility (EMC)", a conformity test of the drive system (motor with controller and connection design) must be carried out. The machine manufacturer must guarantee the test of the drive system and compliance with the directives.

Third-Party Motors to be Controlled

Motor Types

The following motor types can be controlled:

- Asynchronous motors, rotary
- Asynchronous motors, linear
- Synchronous motors, rotary
- Synchronous motors, linear

These motors can be operated within the scope of the technical data of the selected Rexroth IndraDrive Cs controller. If motors have been provided with a holding brake, it should be controlled via the drive controller. Make sure that the relevant technical data of the motor holding brake are complying with those of the holding brake output!

☞ For third-party motors Rexroth, as a matter of principle, does not assume the guarantee for the power data at the motor shaft!

Synchronous Motors

For synchronous motors with motor encoder, the commutation offset must be set during commissioning. The drive firmware provides several methods for determining this offset so that it is possible to determine the value for different motor characteristics.

☞ Observe the restrictions in conjunction with the commutation offset determination when using synchronous motors! See firmware documentation, chapter "Drive Control", "Commutation Setting".

Possibly available reluctance property cannot be used for synchronous third-party motors! For third-party motors, it is impossible to determine fail-safe motor parameter values for using the reluctance property. The respective bit of "P-0-4014, Type of construction of motor" therefore mustn't be set!

Requirements on Third-Party Motors

General Information

For successful and fail-safe use of a third-party motor, check

- whether the third-party motor to be controlled satisfies the voltage loads
- which drive controller is suitable due to the motor torques to be delivered
- whether the third-party motor has the required minimum inductance
- whether the motor can be protected against inadmissible temperature rise in the case of overload (temperature evaluation)
- whether the mounted position measuring system can be evaluated by the drive controller or which position measuring system can be selected for kit motors

Voltage Load of the Third-Party Motor

The voltage load of the insulation system of a motor occurring in practical application is mainly influenced by the following characteristics:

- The output variables of the drive controller which is used (feed the transmission distance)
- Cable parameters depending on cable design and length (determine the properties of the transmission distance, such as the attenuation)
- The motor design regarding capacitive and inductive properties (form the end of the transmission distance)

As a result of the variables, the insulation system of the third-party motor, as regards voltage, is loaded by the following values:

- Periodic peak voltage U_{pp} and
- Voltage change dv/dt

The occurring periodic peak voltages at the motor terminals are caused by reflections at the motor cable end. The insulation of the motor is thereby loaded with a higher peak voltage than the one occurring at the output of the power section.

☞ Determine the occurring voltage load at the **terminals** of the third-party motor in the application with all involved components.

Using the HMF Motor Filter

Use voltage-reducing components (e.g. motor filter HMF), if one of the following criteria applies:

- Allowed voltage change (dv/dt) of third-party motor: **< 5 kV/µs**
- **With mains voltage 3 AC 230 V … 500 V:**

  Allowed periodic peak voltage (crest value) of third-party motor between phase-phase and phase-housing: **< 1,500 V**

- **With mains voltage up to 3 AC 230 V:**

  Allowed periodic peak voltage (crest value) of third-party motor between phase-phase and phase-housing: **< 850 V**

  (To operate motors which do not require any voltage-reducing components at this mains voltage, the switch-on threshold of the braking resistor must be reduced to DC 430 V for devices with the mains connection voltage identifier "03"!)

- The voltage change (dv/dt) and periodic peak voltage (U_{pp}) at the motor terminals are influenced by the length and the electrical properties of the motor cable:
  - The longer the motor cable, the higher the degree of voltage overshoot (periodic peak voltage) at the motor-side cable end. With a cable length of approx. 25 m and more, the maximum periodic peak voltage occurs. Further voltage increase is not to be expected even with longer cables.
  - With cable lengths of less than 15 m, the periodic peak voltage is reduced, depending on the length and as compared to the specified maximum value, down to the DC bus voltage value.

☞ Apart from the nominal current I_N, especially take the maximum allowed switching frequency of the power output stage (f_s) into account with which the motor filter HMF may be operated.

Verify the success of the voltage-reducing measures by measuring the voltage at the motor terminals. Use an isolated measuring device!

Minimum Inductance of Third-Party Motor

Depending on the drive controller used, the motor has to have a minimum value for inductance. The actually available inductance of a motor can be measured directly between two motor terminals by means of an inductance measuring bridge. The measurement has to be made for a complete motor wired for normal operation but not yet connected. During the measurement, one motor terminal remains open! For asynchronous motors, the measured value can only be used if the rotor doesn't have closed slots!

Drive controller	Minimum required motor inductance
HCS01 with 3 × AC 230 V	$L_{U-V} = 60 \times 4 / (\sqrt{2} \times I_{Typ} \times f_s)$ (in mH)
HCS01 with 3 × AC 400 V	$L_{U-V} = 80 \times 4 / (\sqrt{2} \times I_{Typ} \times f_s)$ (in mH)
HCS01 with 3 × AC 480 V	$L_{U-V} = 116 \times 4 / (\sqrt{2} \times I_{Typ} \times f_s)$ (in mH)

I_{Typ} Maximum current of drive controller according to type code (rms value)

f_s Desired switching frequency in kHz

Tab. 4-8: Minimum Inductances Depending on Drive Controller Data, Supply Units and Supply Voltage

Install a three-phase choke in the motor feed wire, if the inductance of the third-party motor is smaller than indicated in the table above. This choke has to increase the inductance that can be measured between two motor terminals to the minimum value.

☞ When the inductance is measured, different inductance values can be determined at different rotor positions within one pole pair distance of the motor. The average value is relevant for the check of the minimum value.

Correct values can only be determined when the motor is **in standstill**!

Available third-party motor	Planned third-party motor
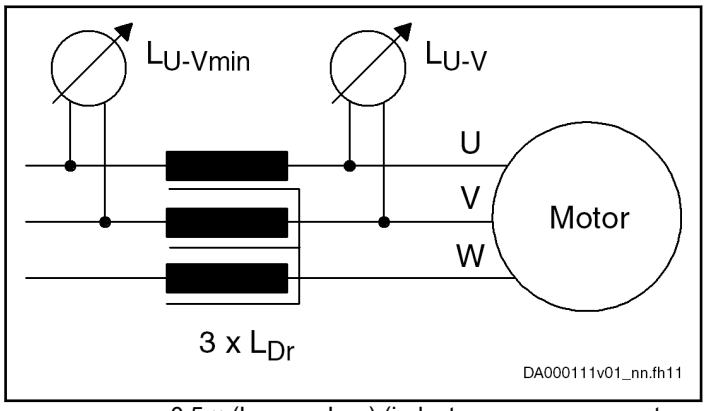 L_{Dr} = 0.5 × (L_{U-Vmin} - L_{U-V}) (inductance measurement with 1 kHz) *Fig. 4-2: Mounting of 3 × L_{Dr} (Three-Phase Choke)*	Calculate the leakage inductance (asynchronous motor) or inductance (synchronous motor) of the third-party motor by means of the single-phase equivalent circuit diagram (manufacturer's specification!). Determine choke by means of calculation, if necessary. It is recommended that you contact Rexroth!

Requirements on the choke:

- $I_{n\_Dr} \geq I_{n\_Mot}$

  The rated current of the choke has to be greater than or equal to the rated motor current.
- Depending on the maximum speed, the choke is loaded with the respective output frequency and the PWM frequency of the drive controller.
- The insulation class has to correspond at least to that of the motor or has to be sized for higher temperatures.
- The voltage load of the choke depends on the drive controller used.

Tab. 4-9: Data for Possibly Required Choke

Temperature Evaluation of Third-Party Motor

Only operate such motors with incorporated temperature sensor at Rexroth IndraDrive Cs controllers so that the motor can be thermally monitored by the drive controller and protected against destruction by too high temperature rise (see "P-0-0512, Temperature sensor").

When, in exceptional cases, you would like to operate third-party motors without temperature sensor at Rexroth IndraDrive Cs controllers, you must determine the thermal time constants of motor housing (P-0-4035) and motor winding (P-0-4034, P-0-4037). By means of its temperature model, the firmware can correctly reflect the cooling situation of the motor.

☞ In case the motor housing or fan is dirty, this worsens the cooling situation of the motor and protection against thermal overload is therefore insufficient!

Requirements on the Encoder of the Third-Party Motor

Motor Encoder of Asynchronous Third-Party Motor

Asynchronous motors can also be controlled by Rexroth IndraDrive Cs controllers in "open-loop" operation (without motor encoder). In "closed-loop" operation (with motor encoder), a relative measuring system is sufficient for asynchronous motors.

Motor Encoder of Synchronous Third-Party Motor

For fail-safe drives with synchronous third-party motors at Rexroth IndraDrive Cs controllers, the following possible combinations or restrictions have to be taken into account when selecting the measuring system:

Drive range	Motor measuring system	Synchronous third-party motor
Rexroth IndraDrive Cs	Absolute	■
	Relative	□

■ Advantageous combination
□ Combination is possible (restrictions specific to application), commissioning may be more complicated!

Tab. 4-10: Possible Combinations of Synchronous Third-Party Motor and Motor Measuring System

☞ The drive controller can evaluate measuring systems as motor encoder when they are contained in "P-0-0074, Encoder type 1 (motor encoder)".

For information on absolute and relative measuring systems, see section "Measuring Systems" of firmware documentation!

Motor Encoder Resolver - Notes on Selection

Resolvers must first be checked as to whether they are suited as motor encoders. To check whether they can be evaluated by the drive controllers, the following resolver data are required:

- Data of resolver system to be compared must be available at 8 kHz
- Ratio
- Current consumption
- DC resistance of stator
- Number of poles
- Phase shift

By means of the resolver data, check whether the supply voltage of the encoder interface and the signal levels of the encoder tracks are sufficient.

Notes on Selection and Commissioning

Selecting the Controller as Regards Continuous Current

The drive controller required for the respective motor is determined by comparing the motor data to the device data.

☞ The continuous current of the drive controller should be greater than the continuous current of the motor.

The continuous power of the drive controller must be greater than the required average power!

Selecting the Connection Technique

For the available power cables and encoder cables, see documentation "Rexroth Connection Cables IndraDrive and IndraDyn".

Notes on Commissioning

☞ For further information, notes on commissioning and supporting documents (e.g., forms for entering the required data) see firmware documentation.

4.3.5 Cables

Motor power cables

Selection

How to select a suitable motor power cable:

See documentation "Rexroth Connection Cables IndraDrive and IndraDyn" (R911322949).

Allowed cable lengths

Allowed cable lengths at ambient temperature T_{a_work} ≤ 40 °C according to EN 60 204:

HCS01.1E-…-A-02	PWM frequency [kHz]			
	4	8	12	16
W0003	40 m	20 m	15 m	5 m
W0006				
W0009				
W0013				
W0018				
HCS01.1E-…-A-03				
W0005				
W0008				
W0018				
W0028				
W0054	75 m	38 m	25 m	-

Tab. 4-11: Allowed motor cable lengths

Combining the individual components

Encoder cables

MSM motors

	HCS01									
	Size 1							Size 2		Size 3
	3 AC 110 … 230 V					3 AC 200 … 500 V				
Motor	W0003	W0006	W0009	W0013	W0018	W0005	W0008	W0018	W0028	W0054
MSM019A-…-C	RKG0033; RKG0041; RKG0034 (extension, optional)							-	-	-
MSM019B-…-C								-	-	-
MSM031B-…-C								-	-	-
MSM031C-…-C								-	-	-
MSM041B-…-C	RKG0033; RKG0041; RKG0034 (extension, optional)								-	-
MSM019A-…-M	RKG0062; RKG0065; RKG0063 (extension, optional)							-	-	-
MSM019B-…-M								-	-	-
MSM031B-…-M								-	-	-
MSM031C-…-M								-	-	-
MSM041B-…-M	RKG0062; RKG0065; RKG0063 (extension, optional)								-	-

- Combination not allowed

Tab. 4-12: Encoder cables for HCS01 converters and MSM motors

Encoder cable length

See chapter "Encoder cable length" on page 197

MSK Motors

See documentation "Rexroth Connection Cables IndraDrive and IndraDyn" → Selection for Encoder Cables.

4.4 Installation conditions

4.4.1 Ambient and operating conditions

⚠ WARNING **Lethal electric shock by live parts with more than 50 V!**

Exclusively operate the device

- with plugged on connectors (even if there haven't been any lines connected to the connectors) and
- with connected equipment grounding conductor!

Control cabinet

The devices in the Rexroth IndraDrive Cs product range, as well as their additional components (except for some braking resistors), have to be mounted **in control cabinets**.

Check that the ambient and operating conditions, in particular the control cabinet temperature, are observed by calculating the heat levels in the control cabinet. Afterwards, make the corresponding measurements to confirm

that ambient and operating conditions have actually been observed. The power dissipation is indicated in the technical data of the individual components as an important input value for calculating the heat levels.

Ambient and operating conditions

Description	Symbol	Unit	Value
Conductive dirt contamination			Not allowed (You can protect the devices against conductive dirt contamination, e.g., by mounting them in control cabinets with a degree of protection of IP54 in accordance with IEC529.)
Degree of protection (IEC529)			IP20
Use within scope of CSA / UL			For use in NFPA 79 applications only.
Temperature during storage			see chapter 5.4 "Storing the components" on page 120
Temperature during transport			see chapter 5.3 "Transporting the components" on page 120
Allowed mounting position Definition of mounting positions: see chapter "Mounting Positions of Components" on page 67			G1
Installation altitude	h_{nom}	m	1000
Ambient temperature range	T_{a_work}	°C	0 … 40
Derating vs. Ambient temperature: The performance data is reduced by the factor F_{Ta} in the ambient temperature range $T_{a\_work\_red}$: $F_{TA} = 1 - [(T_a - 40) \times f_{Ta}]$ Example: With an ambient temperature $T_a = 50°C$ and a load factor $f_{Ta} = 2\%$, the rated power is reduced to $P_{DC\_cont\_red} = P_{DC\_cont} \times F_{Ta} =$ $P_{DC\_cont} \times (1 - [(50 - 40) \times 0.02]) = P_{DC\_cont} \times 0.8$ Operation at ambient temperatures outside of T_{a_work} and $T_{a\_work\_red}$ is not allowed!	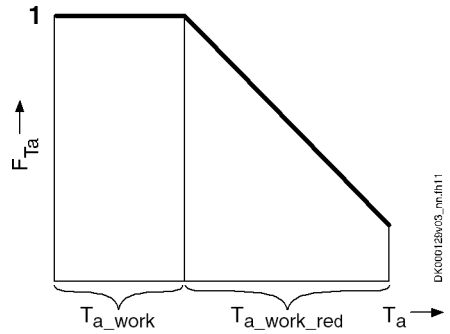		
	$T_{a\_work\_red}$	°C	40 … 55
	f_{Ta}	%/K	Load factor: see technical data for each component (data for cooling and power dissipation → derating of P_{DC_cont}, P_{BD}, I_{out_cont} at $T_{a\_work} < T_a < T_{a\_work\_red}$)

Combining the individual components

Description	Symbol	Unit	Value
Derating vs. installation altitude: At an installation altitude h > h_{nom}, the performance data[2)] reduced by factor f is available. At an installation altitude in the range $h_{max\_without}$ to h_{max}, an isolating transformer has to be installed on the drive system mains connection. Use above h_{max} is not allowed!	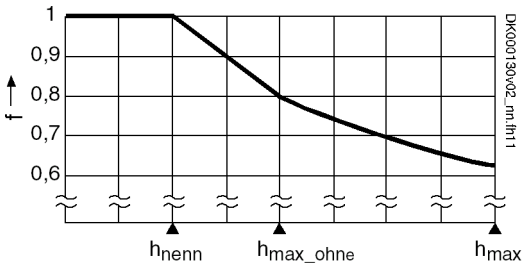		
	$h_{max\_without}$	m	2000
	h_{max}	m	4000
Simultaneous derating for ambient temperature **and** installation altitude	Allowed; reduce with factors f and f_{Ta}		
Relative humidity		%	5 … 95
Absolute humidity		g/m^3	1 … 29
Moisture condensation			Not allowed
Climatic category (IEC 721)			3K3
Allowed pollution degree (EN 50178)			2
Allowed dust, steam			EN 50178 Tab. A.2
Vibration sine: Amplitude (peak-peak) at 10 … 57 Hz [1)]		mm	0.15
Vibration sine: Acceleration at 57 … 150 Hz [1)]		g	1
Overvoltage category			III (according to IEC 60664-1)

1) According to EN 60068-2-6
2) Reduced performance data for drive controllers: permitted DC bus continuous power, permitted mains voltage, braking resistor continuous power, continuous current

Tab. 4-13: Ambient and operating conditions

4.4.2 Control cabinet design and cooling

☞ The only mounting position allowed for supply units and drive controllers to be installed in control cabinets is G1.

Possibilities of heat dissipation

Closed control cabinet with air circulation	Closed control cabinet with heat exchanger	Control cabinet with fan	Closed control cabinet with air conditioning unit
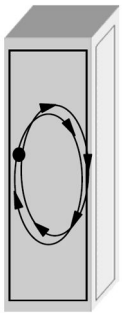 DF000644v01_nn.tif	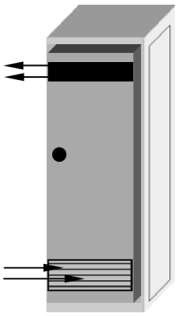 DF000645v01_nn.tif	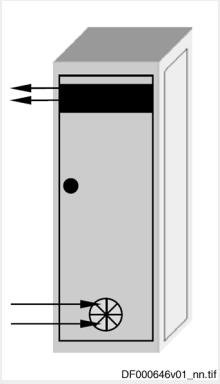 DF000646v01_nn.tif	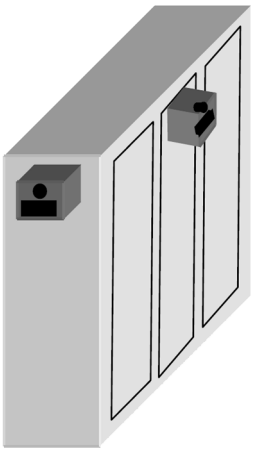 DF000647v01_nn.tif
P_Q ~ 400 W	P_Q ~ 1700 W	P_Q ~ 2700 W	P_Q ~ 4000 W

P_Q Dissipated heat output

Tab. 4-14: Possibilities of heat dissipation

The section below describes the "control cabinet with fan".

Requirements for control cabinets with fan

NOTICE **Risk of damage by unclean air in the control cabinet!**

Operating a control cabinet with a fan, but without the corresponding filters, can damage the devices or cause malfunction.

- Install filters at the air intake opening of the control cabinet so that unclean air cannot get into the control cabinet.
- Service the filters at regular intervals according to the dust loading in the environment.
- Only replace the filters when the fan has been switched off, because otherwise the fan sucks in the dirt coming off the filter and the dirt gets into the control cabinet.

Combining the individual components

Control cabinet ventilation (schematic diagram)

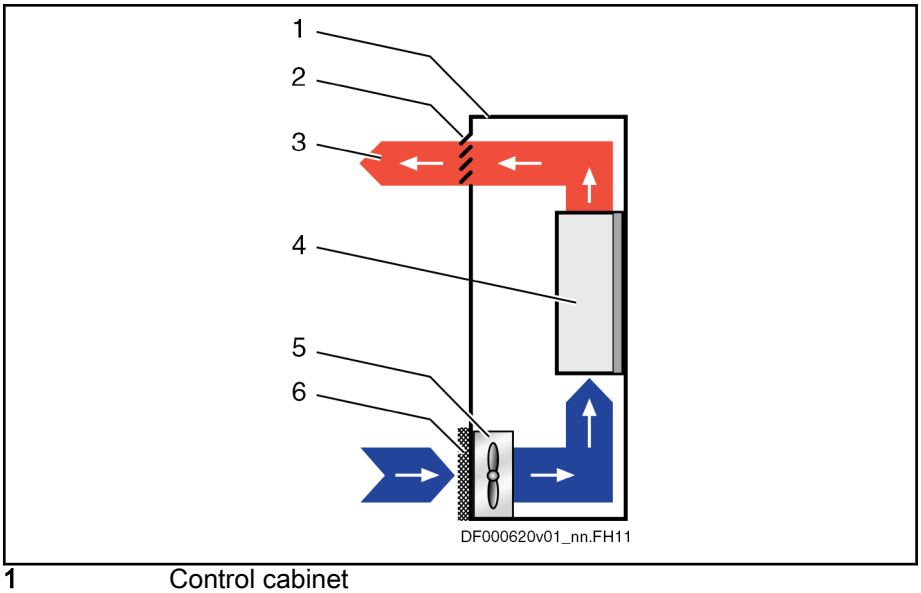

1	Control cabinet
2	Air outlet opening
3	Heat discharge
4	Device in control cabinet
5	Control cabinet fan
6	Filter at air intake opening

Fig. 4-3: Control cabinet ventilation (schematic diagram)

Only clean air gets into the control cabinet through the filter at the air intake opening. The control cabinet fan behind the air intake opening conveys the air into the control cabinet and generates overpressure in the control cabinet. The overpressure prevents unclean air from getting into the control cabinet through possibly existing leaky points (leaky cable ducts, damaged seals, etc.).

4.4.3 UL ratings

This chapter contains:

- Limit values for use within the scope of CSA / UL
- Applied standards (CE conformity, UL listing)

Ambient and operating conditions – UL ratings

Description	Symbol	Unit	HCS01.1E-W0003-_-02	HCS01.1E-W0006-_-02	HCS01.1E-W0009-_-02	HCS01.1E-W0013-_-02	HCS01.1E-W0018-_-02
Short circuit current rating	SCCR	A rms	42000				
Rated input voltage, power[1)]	U_{LN_nom}	V	1 or 3 x AC 110...230				
Rated input current	I_{LN}	A	1.8 or 0.6	2.8 or 1.2	5.0 or 2.3	8.3 or 4.5	12.8 or 9.6
Last modification: 2012-01-23							

Description	Symbol	Unit	HCS01.1E -W0003- _-02	HCS01.1E -W0006- _-02	HCS01.1E -W0009- _-02	HCS01.1E -W0013- _-02	HCS01.1E -W0018- _-02
Output voltage	V_{out}	V	3 x AC 0...230				
Output current	I_{out}	A	1.1	2.0	3.0	4.5	7.6
Last modification: 2012-01-23							

1) Mains input L1, L2, L3 (for HMV and HCS only); For use on a solidly grounded wye source only.

Tab. 4-15: HCS - Ambient and operating conditions - UL ratings

Ambient and operating conditions – UL ratings

Description	Symbol	Unit	HCS01.1E -W0005- _-03	HCS01.1E -W0008- _-03	HCS01.1E -W0018- _-03	HCS01.1E -W0028- _-03	HCS01.1E -W0054- _-03
Short circuit current rating	SCCR	A rms	42000				
Rated input voltage, power[1)]	U_{LN_nom}	V	3 x AC 200...500				
Rated input current	I_{LN}	A	1.5	2.5	5.0	10.0	28.0
Output voltage	V_{out}	V	3 x AC 0...500				
Output current	I_{out}	A	1.7	2.7	7.6	11.5	21.0
Last modification: 2013-01-10							

1) Mains input L1, L2, L3 (for HMV and HCS only); For use on a solidly grounded wye source only.

Tab. 4-16: HCS - Ambient and operating conditions - UL ratings

4.4.4 Compatibility with foreign matters

All Rexroth controls and drives are developed and tested according to the state-of-the-art technology.

As it is impossible to follow the continuing development of all materials (e.g. lubricants in machine tools) which may interact with the controls and drives, it cannot be completely ruled out that any reactions with the materials we use might occur.

For this reason, before using the respective material a compatibility test has to be carried out for new lubricants, cleaning agents etc. and our housings/ materials.

4.5 Mechanical project planning

4.5.1 Drive controller

Dimensional Drawings

Options for Mounting

- **Standard mounting:**

  The back of the device is directly mounted to the mounting surface in the control cabinet

- **Left-hand or right-hand mounting:**

  The left or right side of the device is directly mounted to the mounting surface in the control cabinet

Combining the individual components

HCS01.1E-W0003/5/6/8/9/13 Standard mounting:

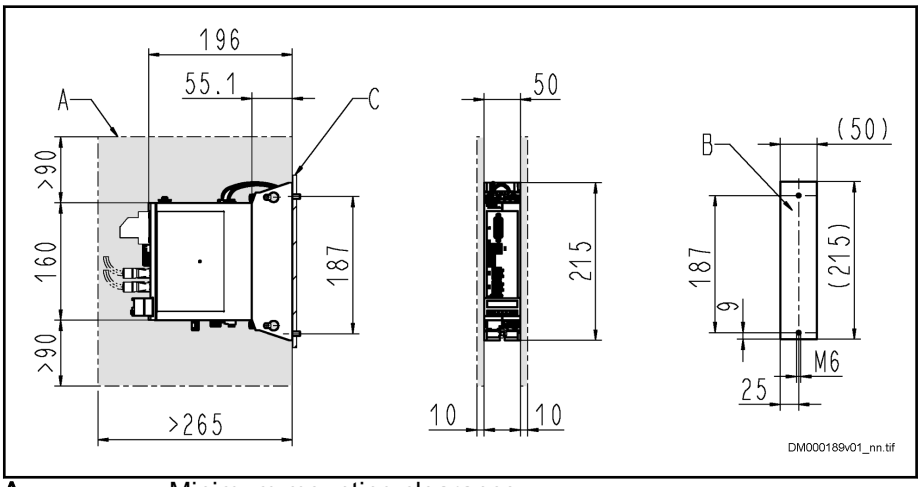

A Minimum mounting clearance
B Boring dimensions
C Mounting surface

Fig. 4-4: Dimensional Drawing HCS01.1E-W0003/5/6/8/9/13 (Standard Mounting)

Left-hand or right-hand mounting:

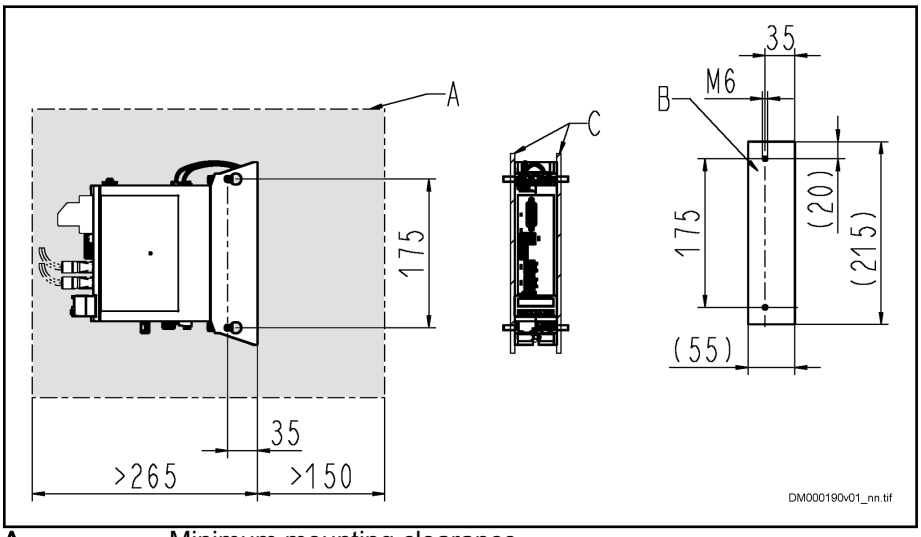

A Minimum mounting clearance
B Boring dimensions
C Mounting surface

Fig. 4-5: Dimensional Drawing HCS01.1E-W0003/5/6/8/9/13 (Left-Hand or Right-Hand Mounting)

HCS01.1E-W0018/28

Standard mounting:

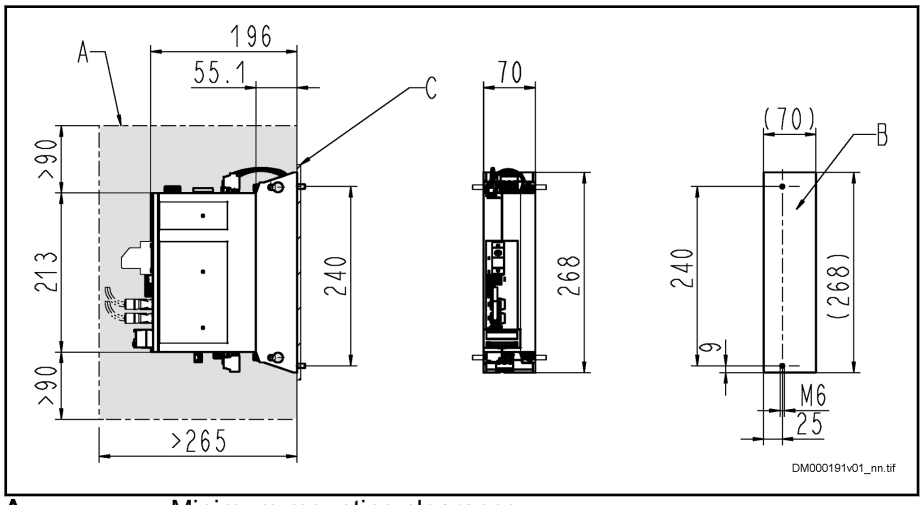

A	Minimum mounting clearance
B	Boring dimensions
C	Mounting surface

Fig. 4-6: Dimensional Drawing HCS01.1E-W0018/28 (Standard Mounting)

Left-hand or right-hand mounting:

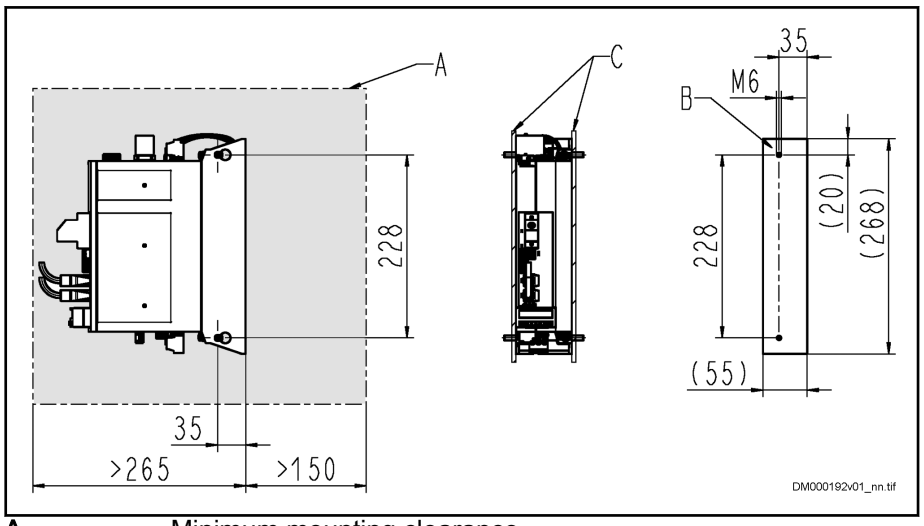

A	Minimum mounting clearance
B	Boring dimensions
C	Mounting surface

Fig. 4-7: Dimensional Drawing HCS01.1E-W0018/28 (Left-Hand or Right-Hand Mounting)

Combining the individual components

HCS01.1E-W0054 Standard mounting:

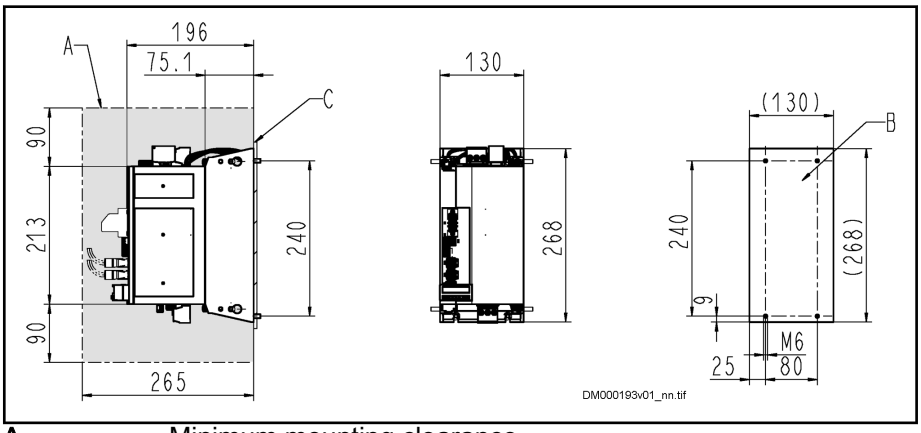

A Minimum mounting clearance
B Boring dimensions
C Mounting surface

Fig. 4-8: Dimensional Drawing HCS01.1E-W0054 (Standard Mounting)

Left-hand or right-hand mounting:

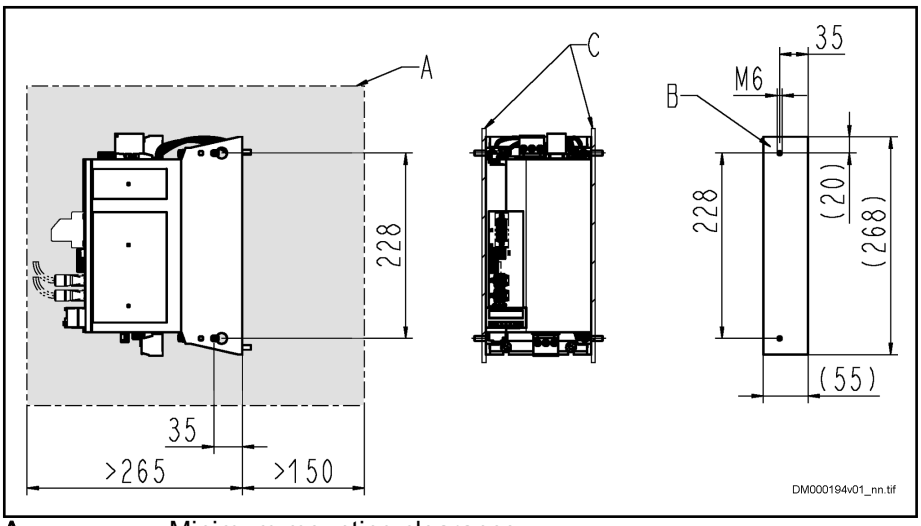

A Minimum mounting clearance
B Boring dimensions
C Mounting surface

Fig. 4-9: Dimensional Drawing HCS01.1E-W0054 (Left-Hand or Right-Hand Mounting)

Dimensions, mass, insulation, sound pressure level

Data for mass, dimensions, sound pressure level, insulation

Description	Symbol	Unit	HCS01.1E-W0003-_-02	HCS01.1E-W0006-_-02	HCS01.1E-W0009-_-02	HCS01.1E-W0013-_-02	HCS01.1E-W0018-_-02
Mass	m	kg	0.72				1.70
Device height[1)]	H	mm	215				268
Device depth[2)]	T	mm	196				
Device width[3)]	B	mm	50				70
Insulation resistance at 500 V DC	R_{is}	Mohm	10.00				
Capacitance against housing	C_Y	nF	2 x 68				2 x 100
Average sound pressure level (accuracy class 2) at P_{DC_cont}[4)]	L_P	dB (A)	tbd				
Last modification: 2012-01-23							

1) 2) 3) Housing dimension; see also related dimensional drawing
4) According to DIN EN ISO 11205; comparative value at distance 1 m, out of cabinet; HCS types with order code -L***: load-dependent

Tab. 4-17: HCS - Data for mass, dimensions, sound pressure level, insulation

Data for mass, dimensions, sound pressure level, insulation

Description	Symbol	Unit	HCS01.1E-W0005-_-03	HCS01.1E-W0008-_-03	HCS01.1E-W0018-_-03	HCS01.1E-W0028-_-03	HCS01.1E-W0054-_-03
Mass	m	kg	0.72		1.70		4.22
Device height[1)]	H	mm	215		268		
Device depth[2)]	T	mm	196				
Device width[3)]	B	mm	50		70		130
Insulation resistance at 500 V DC	R_{is}	Mohm	10.00				
Capacitance against housing	C_Y	nF	2 x 68		2 x 100		
Average sound pressure level (accuracy class 2) at P_{DC_cont}[4)]	L_P	dB (A)	tbd				
Last modification: 2012-01-23							

1) 2) 3) Housing dimension; see also related dimensional drawing
4) According to DIN EN ISO 11205; comparative value at distance 1 m, out of cabinet; HCS types with order code -L***: load-dependent

Tab. 4-18: HCS - Data for mass, dimensions, sound pressure level, insulation

Combining the individual components

Temperatures, cooling, power dissipation, distances

Cooling and power dissipation data

Description	Symbol	Unit	HCS01.1E-W0003-_-02	HCS01.1E-W0006-_-02	HCS01.1E-W0009-_-02	HCS01.1E-W0013-_-02	HCS01.1E-W0018-_-02
Ambient temperature range for operation with nominal data	T_{a_work}	°C	0...40				
Ambient temperature range for operation with reduced nominal data	$T_{a\_work\_red}$	°C	0...55				
	f_{Ta}	%/K	2.0				
Allowed mounting position			G1				
Cooling type			Not ventilated			Forced ventilation	
Volumetric capacity of forced cooling	V	m^3/h	-			11.00	56.00
Allowed switching frequencies[1)]	f_s	kHz	4, 8, 12, 16				
Power dissipation at I_{out_cont} = 0 A; $f_s = f_s$ (min.)[2)]	$P_{Diss\_0A\_fs\_min}$	W	4		6		8
Power dissipation at I_{out_cont} = 0 A; $f_s = f_s$ (max.)[3)]	$P_{Diss\_0A\_fs\_max}$	W	15		17		21
Power dissipation at continuous current and continuous DC bus power respectively[4)]	P_{Diss_cont}	W	8.00	10.00	12.00	20.00	70.00
Minimum distance on the top of the device[5)]	d_{top}	mm	90				
Minimum distance on the bottom of the device[6)]	d_{bot}	mm	90				
Horizontal spacing on the device[7)]	d_{hor}	mm	10				0
Temperature increase with minimum distances d_{bot}; d_{top}; P_{BD}	ΔT	K	tbd				
Last modification: 2015-06-12							

1) Also depending on firmware and control section; see parameter description "P-0-0001, Switching frequency of power output stage"; see "P-0-4058, Amplifier type data"

2) 3) Plus dissipation of braking resistor and control section; find interim values by interpolation to P_Diss_cont

4) Plus dissipation of braking resistor and control section

5) 6) 7) See fig. "Air intake and air outlet at device"

Tab. 4-19: HCS - Data for cooling and power dissipation

Cooling and power dissipation data

Description	Symbol	Unit	HCS01.1E-W0005-_-03	HCS01.1E-W0008-_-03	HCS01.1E-W0018-_-03	HCS01.1E-W0028-_-03	HCS01.1E-W0054-_-03
Ambient temperature range for operation with nominal data	T_{a_work}	°C	0...40				
Ambient temperature range for operation with reduced nominal data	$T_{a\_work\_red}$	°C	0...55				
	f_{Ta}	%/K	2.0				
Allowed mounting position			G1				
Cooling type			Forced ventilation				
Volumetric capacity of forced cooling	V	m^3/h	11.00		56.00		113.00
Allowed switching frequencies[1)]	f_s	kHz	4, 8, 12, 16				4, 8, 12
Power dissipation at I_{out_cont} = 0 A; $f_s = f_s$ (min.)[2)]	$P_{Diss\_0A\_fs\_min}$	W	23		30	36	55
Power dissipation at I_{out_cont} = 0 A; $f_s = f_s$ (max.)[3)]	$P_{Diss\_0A\_fs\_max}$	W	65		85	91	135
Power dissipation at continuous current and continuous DC bus power respectively[4)]	P_{Diss_cont}	W	37.00	46.00	80.00	120.00	400.00
Minimum distance on the top of the device[5)]	d_{top}	mm	90				
Minimum distance on the bottom of the device[6)]	d_{bot}	mm	90				
Horizontal spacing on the device[7)]	d_{hor}	mm	10		0		
Temperature increase with minimum distances d_{bot}; d_{top}; P_{BD}	ΔT	K	tbd	tbd			
Last modification: 2014-09-23							

1) Also depending on firmware and control section; see parameter description "P-0-0001, Switching frequency of power output stage"; see "P-0-4058, Amplifier type data"

2) 3) Plus dissipation of braking resistor and control section; find interim values by interpolation to P_Diss_cont

4) Plus dissipation of braking resistor and control section

5) 6) 7) See fig. "Air intake and air outlet at device"

Tab. 4-20: HCS - Data for cooling and power dissipation

Combining the individual components

NOTICE **Property damage due to temperatures higher than 105 °C!**

Observe the indicated minimum distances!

Above the devices there may only be such materials which

- are not combustible
- are insensitive to the occurring high temperatures

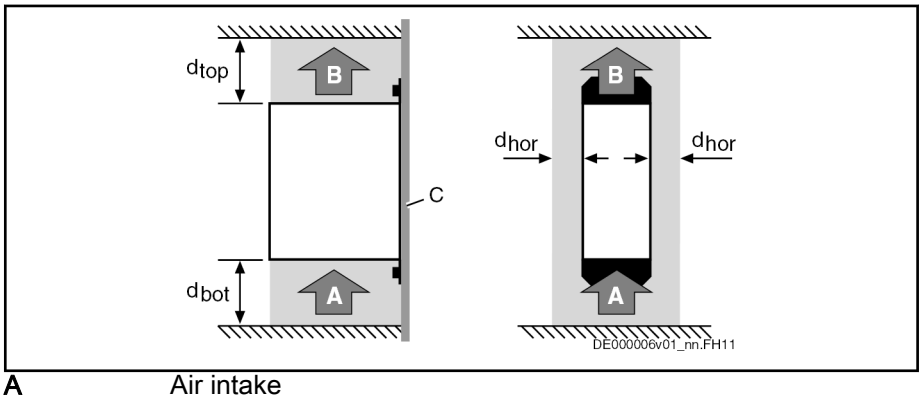

A	Air intake
B	Air outlet
C	Mounting surface in control cabinet
d_{top}	Distance top
d_{bot}	Distance bottom
d_{hor}	Distance horizontal

Fig. 4-10: Air intake and air outlet at device

Mounting Positions of Components

NOTICE **Risk of damage to the components!**

Only operate the components in their allowed mounting positions.

Allowed Mounting Position of the Components

Only the mounting position **G1** is allowed for HCS01 components.

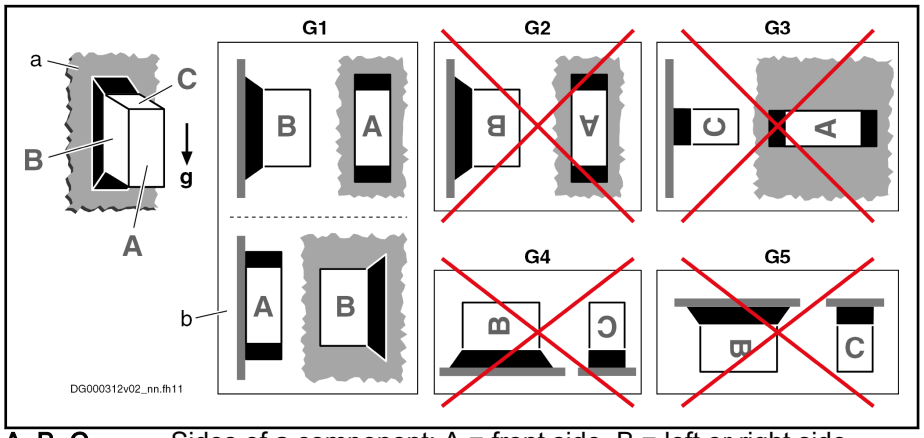

A, B, C	Sides of a component: A = front side, B = left or right side, C = top side
a	Mounting surface in control cabinet
b	Mounting position G1, when side B of component directly mounted to mounting surface
g	Direction of gravitational force
G1	**Normal mounting position:** The natural convection supports the forced cooling air current. This avoids the generation of pockets of heat in the component.
G2	180° to normal mounting position
G3	90° to normal mounting position
G4	Bottom mounting; mounting surface on bottom of control cabinet
G5	Top mounting; mounting surface at top of control cabinet

Fig. 4-11: Allowed Mounting Position of the Components

Combining the individual components

4.6 Electrical project planning

4.6.1 Overall connection diagram

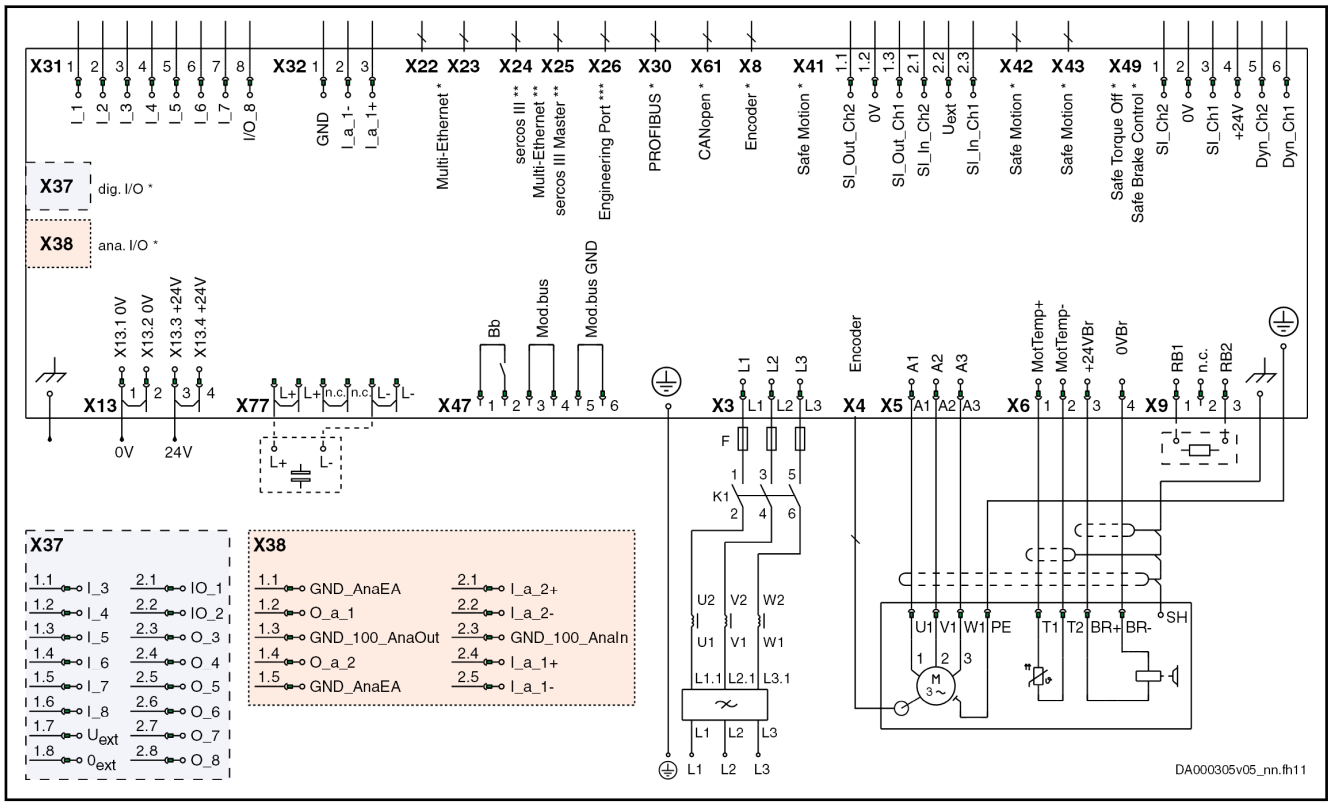

*	Optional
**	**ECONOMY** = sercos III; **BASIC** = Multi-Ethernet; **ADVANCED** = sercos III master
***	Only exists at ADVANCED devices and devices with Engineering Port (EP option)
X6.1, X6.2	T1 and T2 are not available at MSM motors. For proper function of the motor thermal management connect the motor thermal sensor as described in the wiring diagram. Otherwise motor overtemperature sensing is not provided by the drive. For Rexroth motors with data memory in the motor encoder, such as MSK, the motor overload protection level is set automatically while connecting the motor to the drive. There is no adjustment necessary. Otherwise refer to the Rexroth firmware documentation.
X31	No standard assignment preset; make the assignment by means of firmware documentation (see Functional Description, index entry "Digital inputs/outputs")
X47.1, X47.2	For the "ready for operation" message of the device, the Bb relay contact (X47.1, X47.2) has to be wired
X47.3…6	Module bus only available at HCS01.1E-W00xx-x-03 devices
X77	DC bus connection (L+, L-) only available at HCS01.1E-W00xx-x-03 devices

Fig. 4-12: Connection diagram

4.6.2 Project planning of control voltage

Control voltage for drive systems

Some components of a drive system have to be supplied with control voltage. When doing the project planning for control voltage supply, include the drive system component requirements:

- Depending on the motor cable length and whether or not motor holding brakes are used, the **permitted tolerances of the supply voltage**
- Power consumption of the **drive controllers**
- Power consumption of **other loads** (e.g., motor holding brakes, digital outputs)
- **Current carrying capacity of the connection point** for control voltage supply on the component for the purpose of looping through the control voltage to other components

---

☞ **PELV[1] for 24V power supply unit**

For the 24V supply of the devices of the Rexroth IndraDrive Cs range, use a power supply unit or a control-power transformer with protection by PELV according to IEC 60204-1 (section 6.4).

In the scope of CSA/UL, the data of the control-power transformer are limited to:

- Max. output voltage: 42.4 V_{peak} or 30 V_{ac}
- Max. output power: 10000 VA

Sizing the control voltage supply

Determining the power requirements

Drive controller power requirements

The **total power requirements** of the control voltage supply of a drive controller result from the sum of the following power values:

- Basic device (drive controller without connected encoders)
- Optional connection interfaces (e.g., communication, additional encoder evaluation)
- Connected encoder systems
- External loads

For the configuration of your drive controller, see the type plate and the type code.

1) Protective Extra Low Voltage

Combining the individual components

Type code example:

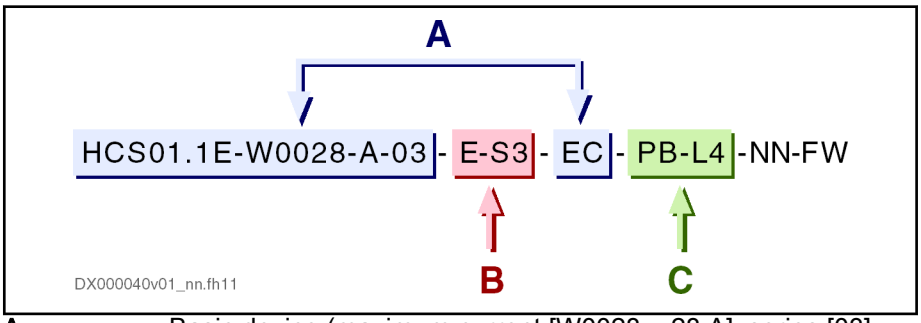

A Basic device (maximum current [W0028 = 28 A], series [03], on-board connection point [EC])
B Control section design (E = Economy; S3 = sercos III)
C Optional connection points (PB = ProfiBus; L4 = safety technology [STO, SBC])

Fig. 4-13: Type code HCS01

The tables below contain the individual power values required by the drive controller. The power requirement of the supplying 24 V power supply unit results from the sum of these individual power values.

Basic device power requirements

The power requirements of the basic device result from

- Maximum current of drive controller
- Control section design

Table 1: Basic device power requirements

Maximum current, series [1] HCS01.1E-...	Control section design		
	E-S3 (ECONOMY)	B-ET (BASIC)	A-CC (ADVANCED)
W0003-A-02-x-xx-EC	8.1 W	12.7 W	13.4 W
W0006-A-02-x-xx-EC			
W0009-A-02-x-xx-EC			
W0013-A-02-x-xx-EC	9.4 W	14.3 W	15 W
W0018-A-02-x-xx-EC	12.7 W	17.3 W	18 W
W0005-A-03-x-xx-EC	9.4 W	14.3 W	15 W
W0008-A-03-x-xx-EC			
W0018-A-03-x-xx-EC	12.7 W	17.3 W	18 W
W0028-A-03-x-xx-EC			
W0054-A-03-x-xx-EC	25.7 W	30.3 W	31 W

1) The wild card **x-xx** in this column represents the control section design. Example: The basic device HCS01.1E-W0028-A-03-E-S3-EC has a power requirement of 12.7 W.

Tab. 4-21: Basic device power requirements

Power requirements of the optional connection points

If the drive controller has optional connection points, the power requirements of the basic device are increased.

Table 2: Power requirement of the optional connection point

Optional connection point (Identifier in type code)	Power requirement [W]	Explanation
EC [1]	1.1	*Encoder systems* • MSM motor encoder • MS2N motor encoder • MSK motor encoder • Sin-cos encoder 1 V_{pp}; HIPERFACE® • Sin-cos encoder 1 V_{pp}; EnDat 2.1; EnDat 2.2 • Sin-cos encoder 1 V_{pp}; with reference track • 5V TTL square-wave encoder; with reference track • SSI encoder
L3	1.0	STO (Safe Torque Off)
L4	1.0	STO (Safe Torque Off) SBC (Safe Brake Control)
S4, S5, SB	2.5	Safe Motion
PB	1.1	ProfiBus (communication)
ET [2]	2.7	Multi-Ethernet interface (communication)
CN	1.5	CANopen
EM	1.2	Encoder emulation
EP	< 0.3	Engineering Port

1) The power requirement of the on-board connection point EC (HCS01-1E-W00xx-A-0x-x-xx-**EC**) is already taken into account with the power requirement of the basic device (see table 1, column "Maximum current, series")

2) The power requirement of the on-board connection point ET (HCS01-1E-W00xx-A-0x-x-**ET**) is already taken into account with the power requirement of the basic device (see table 1, column "Maximum current, series")

Tab. 4-22: Power requirements of the optional connection points

Power requirements of the external loads

External loads include, for example,

- Encoder system of the motor
- Motor holding brake
- Load at a digital output

The drive controller has to supply the external loads with power.

Combining the individual components

Table 3: Power requirements of the external loads

External load	Power requirement
5 V encoder system	$P = I_{Encoder} \times 5\ V \times 1.75$ [1), 5)]
12 V encoder system	$P = I_{Encoder} \times 12\ V \times 1.25$ [1), 5)]
Load at digital output	$P = I_{Load} \times U_{N3}$ [2), 4)]
Motor holding brake	$P = I_{Brake} \times U_{N3}$ [3), 4)]

1) $I_{encoder}$: Current consumption of encoder system
2) I_{load} : Current consumption of external load
3) I_{brake} : Current consumption of motor holding brake
4) U_{N3} : Control voltage supply of drive controller
5) The sum of the power consumption of all connected encoder systems incl. encoder emulation cannot exceed **6 W**.

Tab. 4-23: Power requirements of the external loads

Calculation formula

The total power consumption (P_{N3}) from the 24 V control voltage of a drive controller is calculated with:

$$P_{N3} = P_{basic\ device} + \Sigma P_{optional\ connection\ points} + \Sigma P_{external\ loads}$$

Example of calculation

Component HCS01.1E-W0028-A-03-B-ET-EC-PB-L4-NN-FW		Power requirement
Basic device	HCS01.1E-**W0028**-A-03-**B-ET**-EC	17.3 W
Optional connection point	PROFIBUS "**PB**"	1.1 W
Optional connection point	STO/SBC "**L4**"	1.0 W
12 V encoder system of motor	12 V / 200 mA	$P = I_{Encoder} \times 12\ V \times 1.25 = 0.2\ A \times 15\ V = 3.0\ W$
Motor holding brake	300 mA	$P = I_{Brake} \times U_{N3} = 0.3\ A \times 24\ V = 7.2\ W$
Load at digital output	250 mA	$P = I_{Load} \times U_{N3} = 0.25\ A \times 24\ V = 6.0\ W$
Total power consumption P_{N3}= $P_{Basic\ device} + \Sigma P_{Optional\ connection\ points} + \Sigma P_{External\ loads}$ P_{N3}= 17.3 W + 1.1 W + 1.0 W + 3.0 W + 7.2 W + 6.0 W = **35.6 W**		

Tab. 4-24: Example of calculation

Requirements on the 24V power supply unit

☞ **PELV[2] for 24V power supply unit**

For the 24V supply of the devices of the Rexroth IndraDrive Cs range, use a power supply unit or a control-power transformer with protection by PELV according to IEC 60204-1 (section 6.4).

In the scope of CSA/UL, the data of the control-power transformer are limited to:

- Max. output voltage: 42.4 V_{peak} or 30 V_{ac}
- Max. output power: 10000 VA

The following **parameters** contain the essential electrical requirements on the 24 V power supply unit:

- **Output voltage** or output voltage range
- **Continuous power** which the 24 V power supply unit must supply during operation
- **Peak current** which the 24 V power supply unit has to supply when switching on

Required continuous power

The continuous power of the 24 V power supply unit has to be greater than the sum of the power consumptions P_{N3} of the components being supplied.

To select the 24 V power supply unit, determine the continuous current I_{N3} of all components:

$I_{N3} = P_{N3} / U_{N3}$

(P_{N3} : power consumption of all components)

The calculated current I_{N3} corresponds to the continuous current of the 24 V power supply unit.

The power consumption is indicated as the maximum value of each component and can occur in **individual components**.

In drive systems with **several components**, the occurring power consumption under statistical assumptions will be lower than the calculated one.

Required peak current

When the 24 V control voltage unit is switched on, the 24 V power supply unit is loaded with the charging current of the capacitors from the connected components. This charging current is electronically limited in the components.

The required peak current of the power supply unit is calculated with:

$I_{PeakCurrent\_PowerSupplyUnit} = 1.2 \times P_{N3} / U_{N3}$

(P_{N3} : power consumption of all components)

The power supply unit has to provide the calculated peak current $I_{PeakCurrent\_PowerSupplyUnit}$ for at least one second.

Installing the 24V supply

Notes on installation

- The 24 V supply of the Rexroth IndraDrive Cs drive system components should in principle be installed in a **star** layout. This means it is necessary to run separate supply lines for each group of drive controllers or third-party components. This also applies to multiple-line arrangement in case of supply from, e.g., a supply unit.

2) Protective Extra Low Voltage

Combining the individual components

- Route lines of sufficient size to reduce load-dependent voltage drops.
- For looping through the control voltage, observe the maximum current carrying capacity of the connection points. The maximum current carrying capacity limits the number of devices to which the control voltage can be looped through.

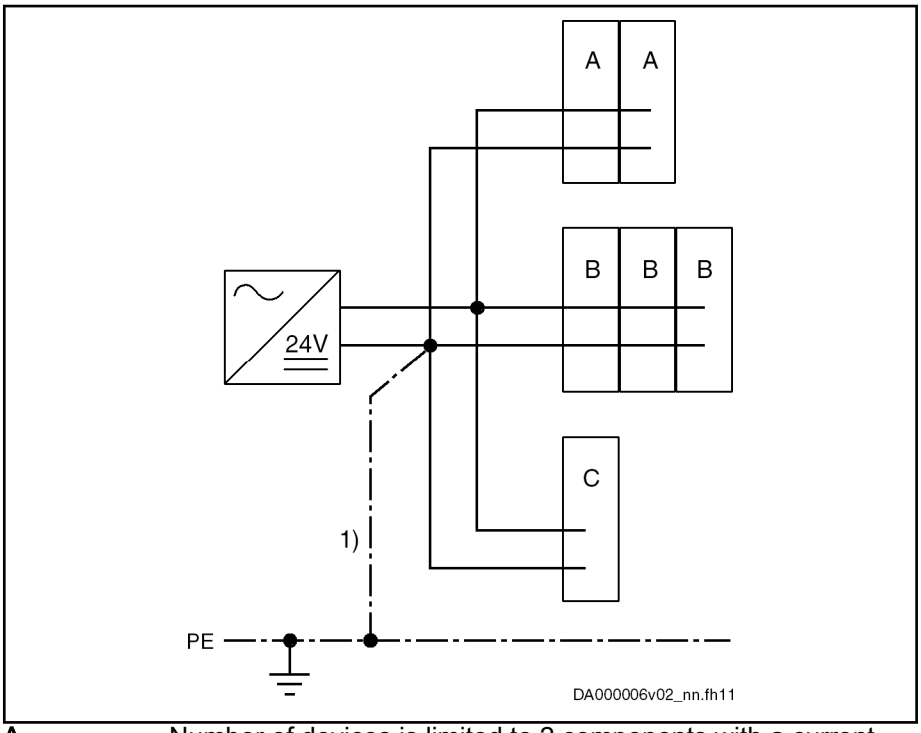

A	Number of devices is limited to 2 components with a current consumption of ≤ 5 A / component
B	Number of devices is limited to 3 components with a current consumption of ≤ 3.3 A / component
C	Third-party component (e.g., PLC, valve, etc.)
1)	Connection to central ground point (e.g., PE earth-circuit connector)

Fig. 4-14: Installing the 24 V supply

☞ If you use several 24 V power supply units:

- Output voltages of the 24 V power supply units must be within the permitted voltage range
- Interconnect reference conductors 0 V of the individual 24 V power supply units with low impedance
- Always switch 24 V power supply units on and off synchronously

Chronological order of 24 V supply and mains voltage

Before mains voltage or DC bus voltage is applied to the components, they have to be supplied by the 24 V supply.

Looping through the control voltage

NOTICE **Property damage in case of error from line cross section being too small!**

Observe the current carrying capacity of the connection points for control voltage supply at the components used.

You may only loop through the control voltage between the components, when the **sum** of current consumptions ΣI_{N3} of the individual components is smaller than **10 A** (current carrying capacity of the connection point X13).

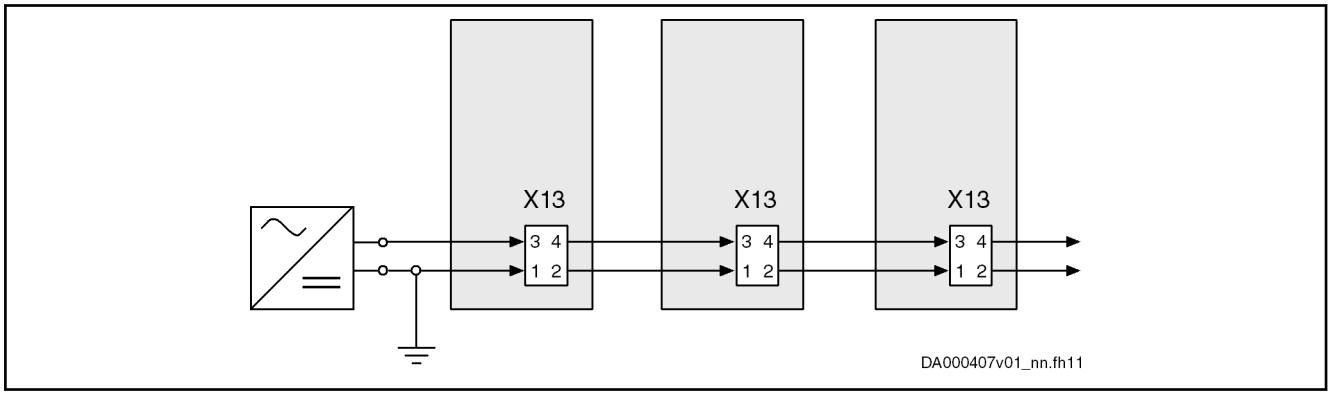

Fig. 4-15: Looping through the control voltage

Sample calculation for 3 drive controllers:

$$I_D = 3 \times \frac{P_{N3}}{U_{N3}}$$

Fig. 4-16: Continuous current

The result I_D has to be smaller than the specified current carrying capacity of the connection point.

4.6.3 Mains connection

Residual-current-operated circuit breakers (RCD, RCCB) as additional fusing

General information

The following designations are used for residual-current-operated circuit breakers:

- RCCB (Residual-Current-Operated Circuit Breaker)
- RCD (Residual-Current-Operated Device)
- RCM (Residual-Current Monitoring Device)
- Earth-leakage circuit breaker (voltage-independent)
- Residual-current circuit breaker (voltage-dependent)

☞ It is only to a limited extent that residual-current-operated circuit breakers can be used with Rexroth IndraDrive Cs systems.

If these circuit breakers are to be used, the company erecting the installation has to check the mutual compatibility of the residual-current-operated circuit breakers and installation or machine with the drive system, in order to avoid accidental triggering of the residual-current-operated circuit breaker. This has to be taken into account

- for switch-on processes, due to high asymmetric inrush currents and
- during operation of the installation, due to leakage currents produced in normal operation.

Cause of leakage currents

For the purpose of stepless speed variation with a high degree of positioning accuracy and dynamic response, certain modulation procedures are necessary for drive systems. For physical reasons, these modulation procedures give rise to inevitable leakage current produced during normal operation. Especially with unbalanced loads of the mains phases or a large number of drives it can easily reach some amperes (rms value).

The leakage current is not sinusoidal but pulse-shaped. For this reason, measuring instruments normally sized for alternating currents in the range of 50 Hz are not suited. Use measuring instruments with rms value measuring ranges up to at least 150 kHz.

The degree of leakage current depends on the following features of the installation:

- Type of inrush current limitation
- Number, type and size of drives used
- Length and cross section of connected motor power cables
- Grounding conditions of the mains at the site of installation
- Unbalance of the three-phase system
- Types of filters and chokes connected in the incoming circuit
- EMC measures that are taken

If measures are taken to improve the electromagnetic compatibility (EMC) of the installation (mains filters, shielded lines), the leakage current in the ground wire is inevitably increased, especially when switching on or in the case of mains unbalance. Given these operating conditions, residual-current-operated circuit breakers can trigger without an error having occurred.

The EMC measures are mainly based on capacitive short-circuiting of the interference currents within the drive system. Inductive filter measures can reduce the leakage currents, but affect the dynamic response of the drive and bring about

- higher construction volume
- higher weight
- expensive core material

Possibilities of use

Motor cable lengths

Keep the motor cables as short as possible. Only short motor cables do allow low leakage currents and thereby enable residual-current-operated circuit breakers to work.

Types of residual-current-operated circuit breakers

There are two types of residual-current-operated circuit breakers:

1. **Residual-current-operated circuit breakers sensitive to power pulse current** (type A acc. to IEC 60755)

   These are normally used. However, it is only pulsating direct fault currents of a maximum of 5 mA and sinusoidal alternating fault currents that they switch off safely. This is why they are not allowed for devices that can generate smoothed direct fault currents. In the case of smoothed direct fault currents that can be produced in power supply units, mains rectifiers and drive controllers with power converters in B6 circuit,

the residual-current-operated circuit breaker is not triggered. This blocks the triggering of a residual-current-operated circuit breaker sensitive to power pulse current in the case of ground contact, i.e. in the case of error.

Residual-current-operated circuit breakers sensitive to power pulse current do not provide any protection against inadmissible contact voltage.

2. **Residual-current-operated circuit breakers sensitive to universal current** (type B acc. to IEC 60755)

   These circuit breakers are suited for smoothed direct fault currents, too, and safely switch off devices with B6 input rectifiers.

   If a current with 30 mA triggers the residual-current-operated circuit breaker, it is possible to use a residual-current-operated circuit breaker with a higher tripping current for machine protection.

   If this residual-current-operated circuit breaker triggers accidentally, too, check in how far the above conditions and dependencies can be improved (for example, by connecting current-compensated mains chokes in the incoming circuit, increasing the inrush current limitation).

Using isolating transformer to reduce leakage current in mains

If there is no improvement achieved and the residual-current-operated circuit breaker, due to specific mains conditions on site, has to be used nevertheless on the mains input side, connect an isolating transformer between mains connection and power connection of the drive system. This reduces the leakage current in the ground wire of the mains that is produced during normal operation which allows the residual-current-operated circuit breaker to be used. Connect the neutral point of the secondary winding of the isolating transformer to the equipment grounding conductor of the drive system.

Adjust the ground-fault loop impedance to the overcurrent protective device so that the unit can be switched off in the case of failure.

Before operating enable, check the correct function of the overcurrent protection device including activation in the case of failure.

Exclusive fusing by residual-current-operated circuit breaker

For drive systems with electronic drive controllers, exclusive protection by means of a residual-current-operated circuit breaker normally is not possible and not allowed.

Electronic equipment that has a nominal power higher than 4 kVA or is destined for permanent connection does not need residual-current-operated circuit breakers.

According to IEC 60204-1 and IEC 61800-5-1, the mains-side protection against indirect contact, i.e. in the case of insulation failure, has to be provided in a different way, for example by means of an overcurrent protection device, protective grounding, protective-conductor system, protective separation or total insulation.

Using residual-current-operated circuit breakers at HCS drive controllers

HCS drive controllers at residual-current-operated circuit breaker

Residual-current-operated circuit breakers can be used under the following conditions:

- Residual-current-operated circuit breaker is of type B (IEC60755)
- Trip limit of the residual-current circuit breaker is ≥ 300 mA
- Supplying TN-S mains
- Maximum length of motor cable 20 m in shielded design
- Use of an NFD03 mains filter

- Each residual-current-operated circuit breaker only supplies one drive controller
- Only Rexroth components and accessories including cables and filters are used

Mains types

TN-S mains type

The TN-S mains type is the usual mains type in Europe.

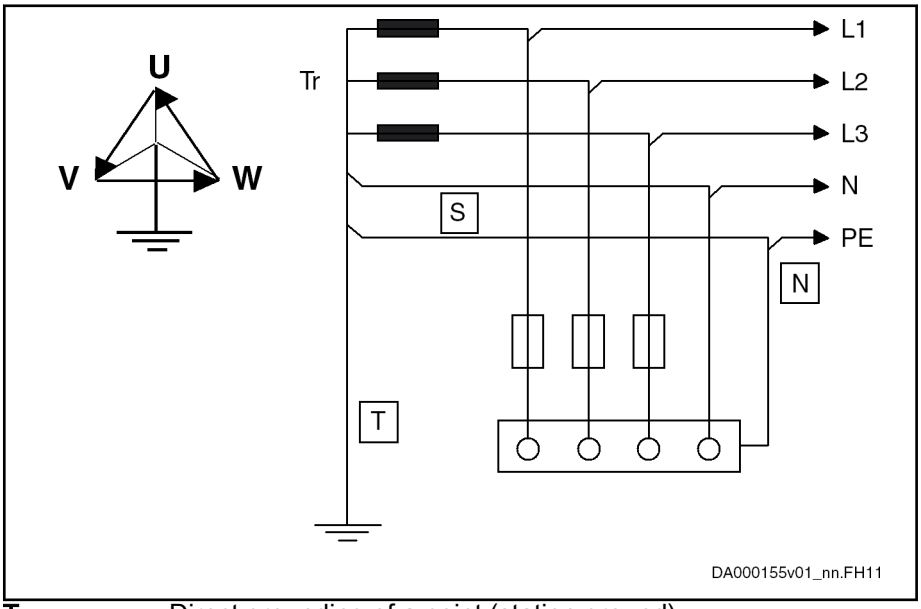

T = Direct grounding of a point (station ground)
N = Exposed conductive parts directly connected to station ground
S = Separate neutral conductor and equipment grounding conductor in entire mains

Fig. 4-17: TN-S mains type

TN-C mains type

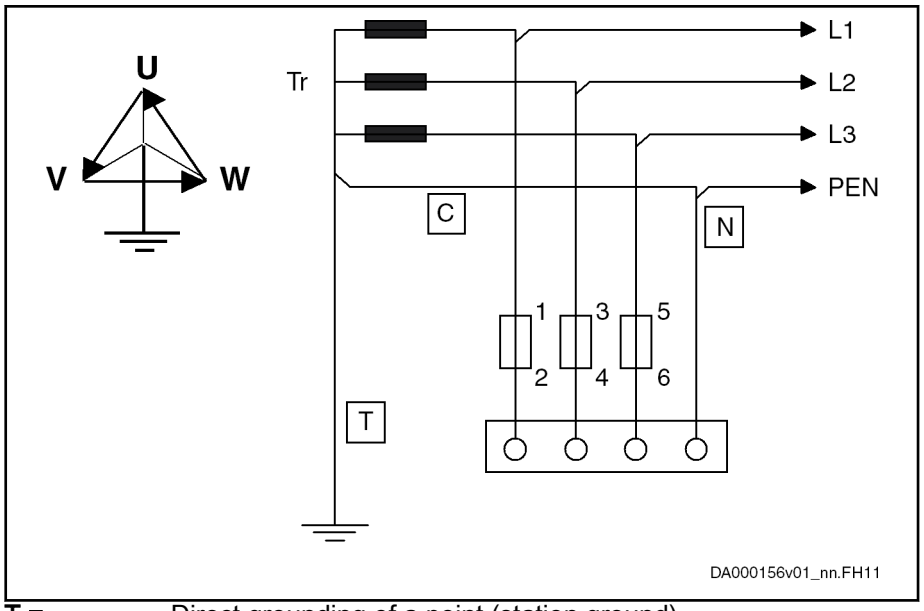

T =	Direct grounding of a point (station ground)
N =	Exposed conductive parts directly connected to station ground
C =	Neutral conductor and equipment grounding conductor functions in entire mains combined in a single conductor, the PEN conductor.

Fig. 4-18: TN-C mains type

IT mains type

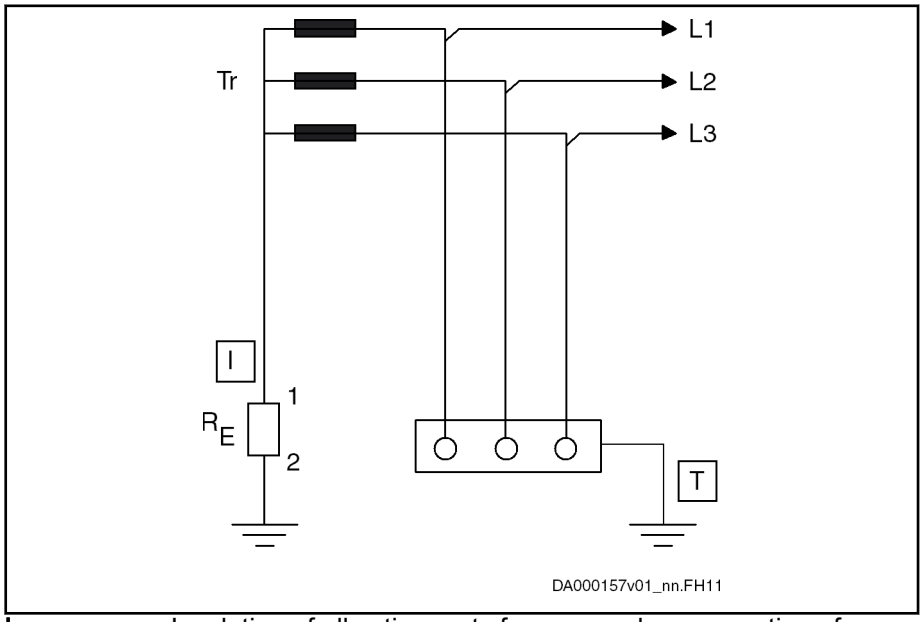

I	Insulation of all active parts from ground or connection of one point to ground via an impedance R_E
T	Exposed conductive parts directly grounded, independent of grounding of current source (station ground)

Fig. 4-19: IT mains type

Combining the individual components

Notes on project planning

NOTICE **Risk to damage to devices from voltage arcing.**

For applications with static charging (e.g., printing, packaging) and operation on **IT mains type**, use an **isolating transformer** with $V_K \leq 2.5\%$.

Voltage increase in the case of ground fault!

In case of a "ground fault" in the IT mains type, higher voltages against ground (device housing) affect the device as opposed to error-free operation.

For operation on the IT mains type, the drive system including mains filter and mains choke should be electrically separated from the mains by an **isolating transformer**.

In this way, the ground fault detection or monitoring can remain effective in the system.

TT system

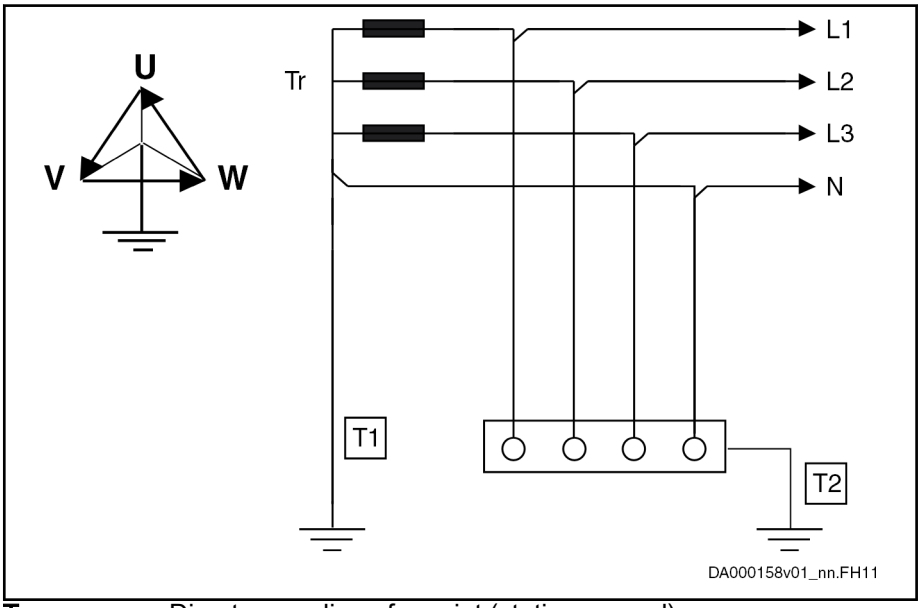

T = Direct grounding of a point (station ground)
T = Exposed conductive parts directly grounded, independent of grounding of current source (station ground)

Fig. 4-20: TT mains system

The EMC requirements are only observed through specific measures (incl. special mains filters).

Mains with grounded outer conductor (Corner-grounded delta mains)

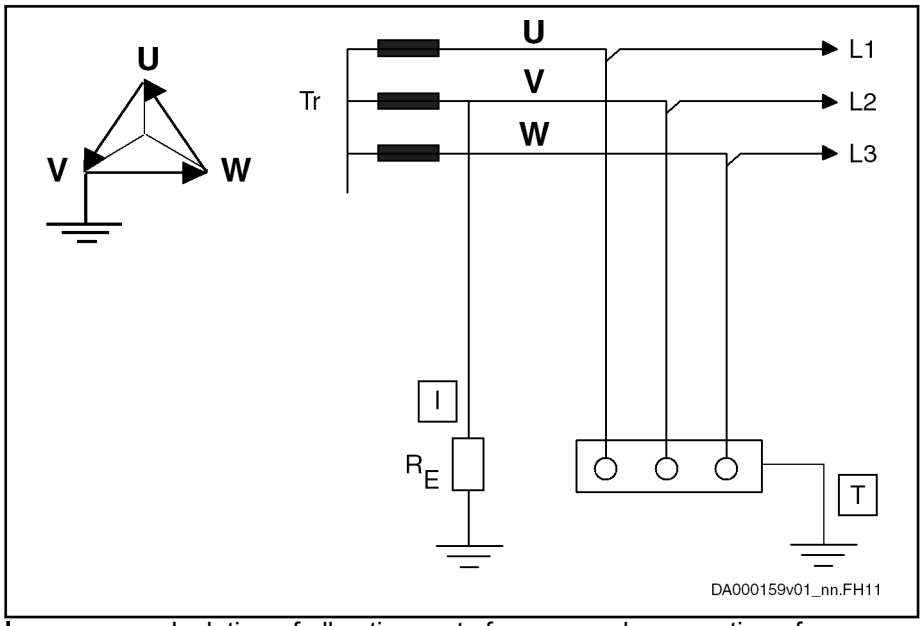

I = Isolation of all active parts from ground, connection of one phase - generally phase V - to ground or via an impedance R_E

T = Exposed conductive parts directly grounded, independent of grounding of current source (station ground)

Fig. 4-21: Mains with grounded outer conductor

Notes on project planning

The EMC requirements are only observed through specific measures (incl. special mains filters).

☞ **HNF01, HNS02, NFD mains filters on mains grounded with outer conductor**

HNF01, HNS02 or NFD03.1 mains filters are not suited for operation on mains grounded with outer conductor. Use isolating transformers.

Allowed mains connection voltage: see technical data for each device

Mains connection type

Mains Supply

1-phase[1)]	3-phase	
1 AC 110 … 230 V	3 AC 200 ... 500 V	
	Autotransformer	-
	3 AC 110 … 230 V	-
HCS01.1E-W0003-A-**02** HCS01.1E-W0006-A-**02** HCS01.1E-W0009-A-**02** HCS01.1E-W0013-A-**02** HCS01.1E-W0018-A-**02**		HCS01.1E-W0005-A-**03** HCS01.1E-W0008-A-**03** HCS01.1E-W0018-A-**03** HCS01.1E-W0028-A-**03** HCS01.1E-W0054-A-**03**
Mains supply		

Combining the individual components

Individual supply	Individual supply
	Group supply
	Central supply

1) With 1-phase mains supply, you can connect the mains supply line to connector X3 at L1, L2 or L3

Tab. 4-25: Mains Supply

Wire the **ready relay contacts** of the drive controllers supplied with mains voltage in the control circuit of the mains contactor.

Individual supply

Each component is **individually** connected to the supply mains. There is **no** DC bus connection between the devices.

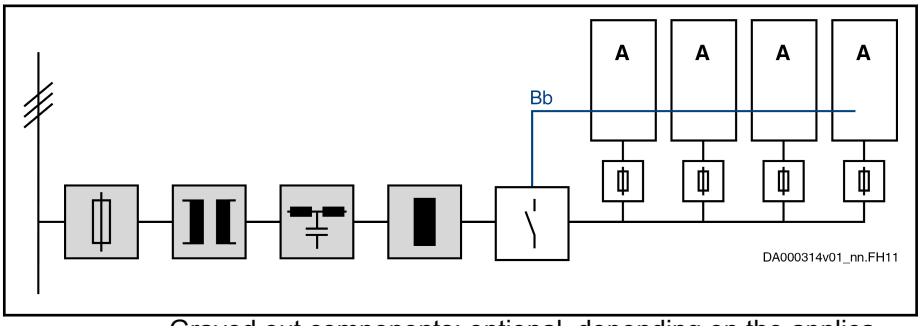

Grayed out components: optional, depending on the application

A HCS01 component

Bb Bb relay contact wiring

Fig. 4-22: Individual supply

NOTICE **Risk of fire caused by missing fuses!**

Install a fuse **before each drive controller**. In case a short circuit occurs in the drive controller, a fuse provides optimum safety against overheating or fire (see also IEC 61800-5-1 and UL 508C).

For distribution in North America, single fuses are required for this type of mains connection (see UL 508A).

In the scope of international and European standards (IEC/EN, not North America), it is allowed to use a group fuse instead of the single fuses. When selecting the nominal current of the group fuse, observe the loop impedance, the line length and the line cross section of the mains supply feeder (see IEC 60204-1, chapter Appendix A).

Observe the data for dimensioning line cross sections and fuses (see also IEC 60204-1, UL 508A and NFPA 79).

Central supply

- Only HCS01.1E-W00**28** and -W00**54** components are suited for central supply.
- Central supply via HCS02.1, HCS03.1, HMV01.1 or HMV02.1 components is not allowed.
- Use the corresponding mains chokes to increase the DC bus continuous power.
- Wire the Bb relay contacts.

One powerful component supplies other components via the common DC bus connection.

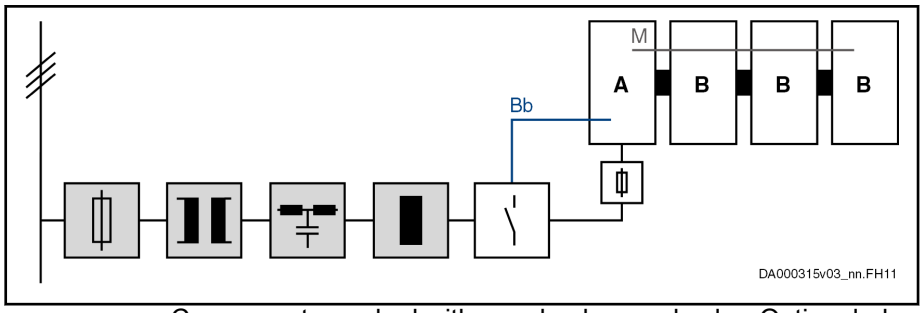

Components marked with gray background color: Optional, depending on the application

A Component HCS01 (more powerful than component B); connected to other components via DC bus

B Component HCS01 (less powerful than component A); connected to other components via DC bus

Bb Bb relay contact wiring

M Module bus

Fig. 4-23: Central Supply

Group supply

- Option 1:

  Several powerful HCS01 components (of the same size!) are connected to the mains and supply other components via the common DC bus connection. This requires balancing chokes between supply mains and components.

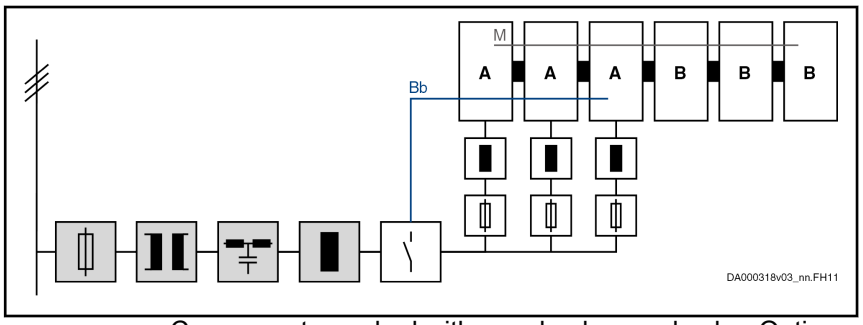

Components marked with gray background color: Optional, depending on the application; the choke is used to reduce current harmonics

A Component HCS01 (more powerful than component B; all components A identical); connected to supply mains via balancing chokes; connected to other components via DC bus

B Component HCS01 (less powerful than component A); connected to other components via DC bus

Bb Bb relay contact wiring

M Module bus

Fig. 4-24: Group Supply; Several HCS01 Components Connected to Supply Mains

- Option 2:

  All HCS01 components (of the same size!) are connected to the mains and interconnected via the common DC bus connection. This requires balancing chokes between supply mains and components.

Combining the individual components

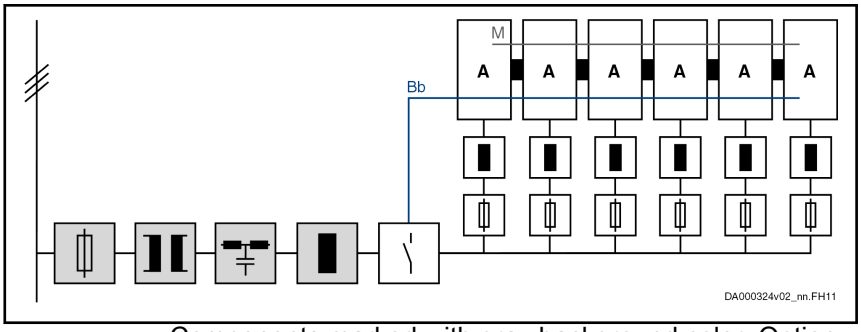

Components marked with gray background color: Optional, depending on the application; the choke is used to reduce current harmonics

A Component HCS01 (all components A identical); connected to supply mains via balancing chokes; interconnected via DC bus

Bb Bb relay contact wiring

M Module bus (not obligatory)

Fig. 4-25: Group Supply; all HCS01 Components Connected to Supply Mains

NOTICE **Risk of fire caused by missing fuses!**

Install a fuse **before each drive controller**. In case a short circuit occurs in the drive controller, a fuse provides optimum safety against overheating or fire (see also IEC 61800-5-1 and UL 508C).

For distribution in North America, single fuses are required for this type of mains connection (see UL 508A).

In the scope of international and European standards (IEC/EN, not North America), it is allowed to use a group fuse instead of the single fuses. When selecting the nominal current of the group fuse, observe the loop impedance, the line length and the line cross section of the mains supply feeder (see IEC 60204-1, chapter Appendix A).

Observe the data for dimensioning line cross sections and fuses (see also IEC 60204-1, UL 508A and NFPA 79).

Parallel operationperation

Group supply or central supply allows the HCS01 components to be operated in parallel to increase the DC bus continuous power.

☞ Parallel operation of HCS01 components is only allowed under the following conditions:

- The components are of the same HCS01 range
- The infeeding HCS01 components are of the same type
- Additional chokes balance the mains current

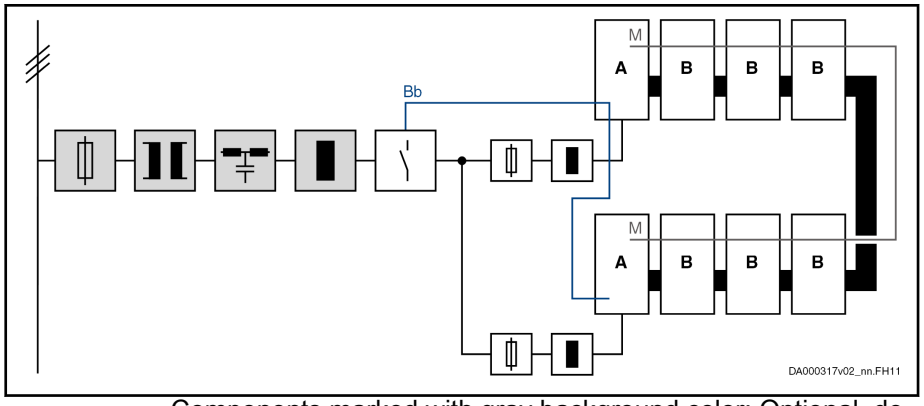

Components marked with gray background color: Optional, depending on the application; the choke is used to reduce current harmonics

A Component HCS01 (more powerful than component B); connected to other components via DC bus

B Component HCS01 (less powerful than component A); connected to other components via DC bus

Bb Bb relay contact wiring

M Module bus

Fig. 4-26: Parallel operation

☞ Connect the Bb relay contacts of all supplying components in series. You thereby ensure that the mains contactor is switched off in case there is an error in a component.

Mains connected load and mains current

Technical data of the components

- See chapter 7.3.2 "Mains voltage" on page 233
- See chapter 7.3.3 "DC bus" on page 240

Calculating the mains-side phase current

The mains-side phase current is required for the following cases:

- Selecting mains contactor
- Determining fuses in the mains connection
- Determining line cross section
- Selecting other components in the mains connection (mains filter, mains choke)

Operation under rated conditions

For data on mains contactor, fuses and cross section in operation under rated conditions, see technical data of the respective component.

Operation at partial load

Operation at partial load can lead to smaller mains contactors, fuses and line cross sections.

If defined data for operation at partial load are available, the mains-side phase current can be determined as follows:

1. Determine **motor power**

   Take power of drive controller-motor combination from Rexroth IndraSize or calculate it.

Combining the individual components

$$P_{mHa} = \frac{M_n \times n_n}{9550}$$

P_{mHa}	Mechanical nominal power for main drives (shaft output) [kW]
M_n	Nominal motor torque [Nm]
n_n	Nominal motor speed [min^{-1}]

2. Determine **DC bus power** from motor power and efficiency

$$P_{DC} = \frac{M_{eff} \times n_m \times 2\pi}{60} \times k$$

P_{DC}	Required DC bus continuous power [W]
M_{eff}	Effective torque in Nm
n_m	Average speed in min^{-1}
k	Factor for motor and controller efficiency = 1.25

3. Add **powers of all axes** at common DC bus and put them into relation to rated power of supply unit

   ⇒ Partial load of P_{DC_cont} is available

4. Determine **power factor TPF** for partial load (TPF = Total Power Factor)

   For the value **TPF** at rated power and TPF_{10} (at 10% of rated power), see technical data (mains voltage) of the component.

5. Calculate **mains connected load**

$$S_{LN} = \frac{P_{DC}}{TPF}$$

S_{LN}	Mains connected load [VA]
P_{DC}	DC bus continuous power [W]
TPF	Total Power Factor λ

6. Calculate **mains-side phase current**

3-phase: $$I_{LN} = \frac{S_{LN}}{U_{LN}\sqrt{3}}$$

1-phase: $$I_{LN} = \frac{S_{LN}}{U_{LN}}$$

I_{LN}	Mains-side phase current in [A]
S_{LN}	Mains connected load [VA]
U_{LN}	Voltage between phases of mains [V]

7. Select **mains contactor**
8. Determine **mains circuit breaker and line cross section**

   See chapter "Dimensioning the line cross sections and fuses " on page 87

Dimensioning the line cross sections and fuses

Dimensioning the line cross sections and fuses in the supply feeder and branches to the drive system:

1. Determine current in supply feeder of drive system and correct it with correction factors for ambient temperature and bundling.

   (In the technical data of the components in section "Data for mains voltage supply", you can find standardized data for connection cross section and mains circuit breaker at operation under rated conditions.)
2. Determine country of use ("international except for USA/Canada" or "USA/Canada")
3. Determine installation type (e.g., B1 or B2)
4. In "Current carrying capacity" table row, select the value that is immediately above the value determined in the first step
5. In "Fuse" table row, read corresponding fuse
6. In "Cross section A …" table row, read corresponding required cross section

International except for USA/ Canada; installation type B1

Country of use: international except for USA/Canada				
Fuse I_N [A]			Current carrying capacity (× 0.87) $I_{Z(40)}$ [A]	Cross section A [mm²] Installation type B1
1 ×	2 ×	3 ×		
2			1.6	1.5
4			3.3	1.5
6			5.0	1.5
10			8.6	1.5
16			10.3	1.5
16			13.5	1.5
20			18.27	2.5
35			24.36	4
35			31.32	6
50			43.50	10
80			59.16	16
100			77.43	25
125			95.70	35
160			116.58	50
200			148.77	70
200			180.09	95
250			207.93	120
250			227.94	150
315			257.52	185
355			301.02	240

Combining the individual components

Country of use: international except for USA/Canada				
Fuse I_N [A]			Current carrying capacity (× 0.87) $I_{Z(40)}$ [A]	Cross section A [mm²] Installation type B1
1 ×	2 ×	3 ×		
400			342.78	300
315	160		238.03	2 × 70
400	160		288.14	2 × 95
400	200		332.69	2 × 120
400	200		364.70	2 × 150
500	250		412.03	2 × 185
630	315		481.63	2 × 240
630	315		548.45	2 × 300
400		125	312.42	3 × 70
500		160	378.19	3 × 95
500		160	436.65	3 × 120
630		200	478.67	3 × 150
630		200	540.79	3 × 185
800		250	632.14	3 × 240
800		315	719.84	3 × 300

Tab. 4-26: Line cross sections and fuses, B1 according to EN 60204-1:2006, Table 6, for 150mm² and more DIN IEC 60364-5-52:2004, Table B. 52-4

International except for USA/ Canada; installation type B2

Country of use: international except for USA/Canada				
Fuse I_N [A]			Current carrying capacity (× 0.87) $I_{Z(40)}$ [A]	Cross section A [mm²] Installation type B2
1 ×	2 ×	3 ×		
2			1.6	0.75
4			3.3	0.75
6			5.0	0.75
10			8.5	0.75
16			10.1	1.0
16			13.05	1.5
20			17.40	2.5
25			23.49	4
35			29.58	6
50			40.02	10
63			53.94	16
80			69.60	25

Country of use: international except for USA/Canada				
Fuse I_N [A]			Current carrying capacity (× 0.87) $I_{Z(40)}$ [A]	Cross section A [mm²] Installation type B2
1 ×	2 ×	3 ×		
100			86.13	35
125			102.66	50
160			129.63	70
200			155.73	95
200			179.22	120
224			195.75	150
250			221.85	185
315			258.39	240
355			294.93	300
	125		207.41	2 × 70
	160		249.17	2 × 95
	160		286.75	2 × 120
	200		313.20	2 × 150
	200		354.96	2 × 185
	250		413.42	2 × 240
	315		471.89	2 × 300
		100	272.22	3 × 70
		125	327.03	3 × 95
		160	376.36	3 × 120
		160	411.08	3 × 150
		200	465.89	3 × 185
		200	542.62	3 × 240
		250	619.35	3 × 300

Tab. 4-27: Line cross sections and fuses, B2 according to EN 60204-1:2006, Table 6, for 150mm² and more DIN IEC 60364-5-52:2004, Table B. 52-4

International except for USA/ Canada; installation type E

Country of use: international except for USA/Canada				
Fuse I_N [A]			Current carrying capacity (× 0.87) $I_{Z(40)}$ [A]	Cross section A [mm²] Installation type E
1 ×	2 ×	3 ×		
2			1.6	2
4			3.3	4
6			5.0	6
10			8.3	10

Combining the individual components

Country of use: international except for USA/Canada				
Fuse I_N [A]			Current carrying capacity (× 0.87) $I_{Z(40)}$ [A]	Cross section A [mm²] Installation type E
1 ×	2 ×	3 ×		
16			10.4	16
16			12.4	16
20			16.10	1.5
25			21.75	2.5
35			29.58	4
50			37.41	6
63			52.20	10
80			69.60	16
100			87.87	25
125			109.62	35
160			133.11	50
200			170.52	70
250			207.06	95
315			240.12	120
355			277.53	150
400			316.68	185
425			374.10	240
500			432.39	300
	160		272.83	2 x 70
	200		331.30	2 x 95
	250		384.19	2 x 120
	250		444.05	2 x 150
	315		506.69	2 x 185
	400		598.56	2 x 240
	400		691.82	2 x 300
		160	358.09	3 x 70
		200	434.83	3 x 95
		200	504.25	3 x 120
		250	582.81	3 x 150
		250	665.03	3 x 185
		315	785.61	3 x 240
		400	908.02	3 x 300

Tab. 4-28: Line cross sections and fuses, E according to EN 60204-1:2006, Table 6, for 150mm² and more DIN IEC 60364-5-52:2004, Table B. 52-10

USA/Canada; installation type E

Country of use: USA/Canada					
Fuse I_N				Current carrying capacity I_Z [A]	Cross section A Installation type E
1 ×	2 ×	3 ×	4 ×		
2				1.6	14 AWG
4				3.3	14 AWG
6				5	14 AWG
10				8.3	14 AWG
16				13	14 AWG
20				15	14 AWG
25				20	12 AWG
40				30	10 AWG
70				50	8 AWG
80				65	6 AWG
100				85	4 AWG
110				100	3 AWG
125				115	2 AWG
150				130	1 AWG
175				150	1/0 AWG
200				175	2/0 AWG
225				200	3/0 AWG
250				230	4/0 AWG
300				255	250 kcmil
300				285	300 kcmil
350				310	350 kcmil
350				335	400 kcmil
400				380	500 kcmil
450				420	600 kcmil
600				460	700 kcmil
600				475	750 kcmil
600				490	800 kcmil
600				520	900 kcmil
800				545	1000 kcmil
800				590	1250 kcmil
800				625	1500 kcmil
800				650	1750 kcmil

Combining the individual components

Country of use: USA/Canada					
Fuse I_N				Current carrying capacity I_Z [A]	Cross section A Installation type E
1 ×	2 ×	3 ×	4 ×		
800				665	2000 kcmil
	200			300	2 × 1/0 AWG
	225			350	2 × 2/0 AWG
	250			400	2 × 3/0 AWG
	300			460	2 × 4/0 AWG
	300			510	2 × 250 kcmil
	350			570	2 × 300 kcmil
	350			620	2 × 350 kcmil
	400			670	2 × 400 kcmil
	450			760	2 × 500 kcmil
	600			840	2 × 600 kcmil
	600			920	2 × 700 kcmil
	600			950	2 × 750 kcmil
	600			980	2 × 800 kcmil
	800			1040	2 × 900 kcmil
	800			1090	2 × 1000 kcmil
		200		450	3 × 1/0 AWG
		225		525	3 × 2/0 AWG
		250		600	3 × 3/0 AWG
		300		690	3 × 4/0 AWG
		300		765	3 × 250 kcmil
		350		855	3 × 300 kcmil
		350		930	3 × 350 kcmil
		400		1005	3 × 400 kcmil
		450		1140	3 × 500 kcmil
			200	600	4 × 1/0 AWG
			225	700	4 × 2/0 AWG
			250	800	4 × 3/0 AWG
			300	920	4 × 4/0 AWG
			300	1020	4 × 250 kcmil
			350	1140	4 × 300 kcmil
			350	1240	4 × 350 kcmil

Country of use: USA/Canada					
Fuse I_N				Current carrying capacity I_Z [A]	Cross section A Installation type E
1 ×	2 ×	3 ×	4 ×		
			400	1340	4 × 400 kcmil
			450	1520	4 × 500 kcmil

Tab. 4-29: Line cross sections and fuses according to UL508A:2007, Table 28.1

Dimensioning variables of the table values

1. Ambient temperature T_A of routed lines ≤ 40 °C
2. Temperature T_L at conductor at nominal current: 90 °C for UL-listed lines (USA/Canada) or 70 °C for PVC lines
3. The nominal current of the fuse is approx. 10-20% above the nominal current I_{LN} of the converter/supply unit or the determined current of the drive system.
4. Installation types:
   - B1 in accordance with IEC 60364-5-52, e.g. stranded wires routed in cable duct
   - B2 in accordance with IEC 60364-5-52, e.g. multi-core line routed in cable duct
   - E in accordance with EN 60204-1, e.g. multi-core line routed on open cable tray
   - In accordance with NFPA 79 (external wiring), UL508A (internal wiring), NEC, NFPA 70:
     - 1 cable with 3 conductors, 1 neutral conductor and 1 equipment grounding conductor
     - Routed in pipe on the wall

     Internal wiring: Routing inside of control cabinet or inside of devices

     External wiring: Routing outside of control cabinet

     Field wiring: Data of cross sections of terminal connectors wired by the user (in the field)
5. Recommendation for design of the fuses:
   - International except for USA/Canada:
     - Fuse-link in accordance with IEC 60269-1, characteristic gG (fuses)
     - Circuit breakers in accordance with IEC 60898-1/2, type B or C
     - Circuit breakers in accordance with IEC 60947-2/6-2
   - USA/Canada:
     - Class J; 600 V

Correction factors

For deviating dimensioning variables, the corresponding standards specify correction factors.

Below you can find the correction factors for ambient temperature and numbers of routed lines and circuits. If necessary, multiply the determined current in the supply feeder with these factors.

Ambient temperature correction factor

Ambient temperature T_A / °C	30	35	40	45	50	55	60
Correction factor according to EN 60204-1:2006, table D.1	0.87	0.93	1.00	1.1	1.22	1.41	1.73
Correction factor according to NFPA 79:2007, table 12.5.5(a)	0.88	0.94	1.00	1.1	1.18	1.32	1.52

Tab. 4-30: Ambient temperature correction factor in accordance with EN 60204-1:2006 and NFPA 79:2007

Correction factor for bundling lines (installation methods B2 and E) and circuits (installation method B1[1])

Number of lines	1	2	3	4	5
Correction factor according to EN 60204-1:2006, table D.2	1	1.25	1.43	1.54	1.67
Correction factor according to NFPA 79:2007, table 12.5.5(b)	1	1.25			

1) Three single cores (L1, L2, L3) for mains supply of a device are to be considered as one circuit.

Tab. 4-31: Correction factor for bundling lines and circuits in accordance with EN 60204-1:2006 and NFPA 79:2007

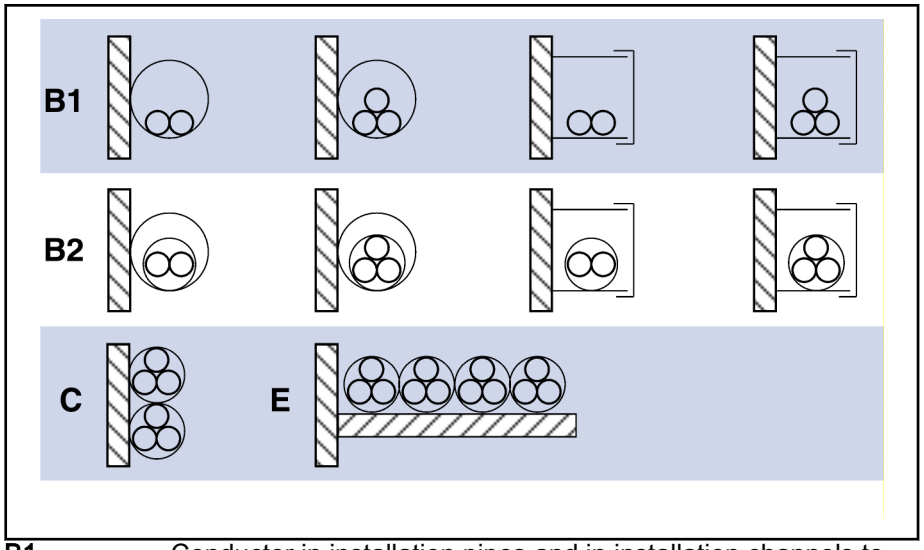

B1	Conductor in installation pipes and in installation channels to be opened
B2	Cables or lines in installation pipes and in installation channels to be opened
C	Cables or lines on walls
E	Cables or lines on open cable trays.

Fig. 4-27: Installation methods (compare IEC 60364-5-52; VDE0298-7; EN 60204-1)

Dimensioning and selecting the mains transformer

Mains transformers are always needed when the mains voltage is outside of the allowed nominal voltage of the component.

Grounded mains

The mains voltage for grounded mains is generally adjusted with **autotransformers**.

Ungrounded mains

The mains voltage for ungrounded mains is generally adjusted with **isolating transformers** to prevent overvoltages between outer conductor and ground. Short-circuit voltage of the isolating transformer: ≤ 4%

Applications for autotransformers

With HCS01 components, there are two applications that require autotransformers:

1. HCS01.1E-W00xx-A-**02** components are used:

   With a mains voltage of 3 AC 400 V, the voltage must be adjusted via an autotransformer to use HCS01.1E-W00xx-A-**02** components with an input voltage range of 3 AC 110…230 V.

2. An MSM motor is used in conjunction with an HCS01.1E-W00xx-A-**03** component:

   MSM motors have been dimensioned for a voltage of 230 V. To operate MSM motors at a mains voltage of 3 AC 400 V at an HCS01.1E-W00xx-A-**03** component, the mains voltage has to be adjusted to 3 AC 230 V via an autotransformer.

Dimensioning the mains filter

Criteria for Selecting the Mains Filter

Take the following criteria into account for selecting the appropriate mains filter:

- EMC limit value class on site
- Ambient conditions on site

- Harmonics on mains voltage on site
- Loading by mains voltage and mains frequency on site
- Loading by harmonics on site
- Loading by mains-side phase current
- Total length of connected power cables
- Sum of leakage capacitances
- Clock frequency of drive controller

How to proceed for selecting the mains filter

The selection of the mains filter is significantly determined by the operating conditions.

How to proceed for selecting the mains filter:

1. Determine the required EMC limit value class for the application.
2. Determine the maximum applied mains voltage. Observe that all Rexroth IndraDrive Cs mains filters are not suited for a mains voltage of 3 AC 500 V.

   Check whether the mains voltage of the mains filter is loaded with harmonics and still allowed for the mains filter.

   If necessary, reduce the harmonics on site.
3. Determine the mains connection type, such as central supply, group supply, etc. (To do this, it is useful to outline the involved components and their interaction.)
4. Calculate the **mains-side phase current** of the mains filter. You can find the procedure for calculating the mains-side phase current in a separate chapter (see chapter "Calculating the mains-side phase current " on page 85). For selecting the components, calculate the effective rms value.

   Check or determine the maximum occurring ambient temperature. Select a mains filter with a higher nominal current, if the ambient temperature is above 45 °C.
5. The nominal current of the selected mains fuse should not exceed the nominal current of the mains filter.
6. Determine the number of drive axes.
7. Determine the total length of the connected power cables.
8. Determine the sum of the leakage capacitances on the load side of the mains filter. The sum of the leakage capacitances results from the number of operated axes and the length of the connected power cables. You can find the procedure for determining the leakage capacitance in a separate chapter (see chapter 11.2 "Determining the Leakage Capacitance" on page 325).
9. Take the clock frequency of the drive controller into account.

   The higher the clock frequency of the drive controller, the higher the leakage currents and the interference emissions they involve.

   The following leakage capacitances (motor cable + motor) should not be exceeded per drive controller.

HCS01.1E-W0003, -W0006, -W0009, -W0013

Clock frequency [kHz]	Maximum leakage capacitance (Motor + cable) per device [nF]	Motor cable length [m]
4	33	40
8	17	20
12	13	15
16	5	5

Tab. 4-32: Clock frequency, leakage capacitance, motor cable length

HCS01.1E-W0005, -W0008

Clock frequency [kHz]	Maximum leakage capacitance (Motor + cable) per device [nF]	Motor cable length [m]
4	34	40
8	18	20
12	14	15
16	6	5

Tab. 4-33: Clock frequency, leakage capacitance, motor cable length

HCS01.1E-W0018, -W0028

Clock frequency [kHz]	Maximum leakage capacitance (Motor + cable) per device [nF]	Motor cable length [m]
4	40	40
8	24	20
12	20	15
16	12	5

Tab. 4-34: Clock frequency, leakage capacitance, motor cable length

HCS01.1E-W0054

Clock frequency [kHz]	Maximum leakage capacitance (Motor + cable) per device [nF]	Motor cable length [m]
4	85	75
8	43	38
12	30	25

Tab. 4-35: Clock frequency, leakage capacitance, motor cable length

Select the appropriate mains connection (supply unit/converter, mains choke, mains filter) from the tables in the corresponding chapter (see chapter "Combining transformer, mains filter and mains choke" on page 103).

Combining the individual components

Notes on installation

☞ When using NFE02 or NFD03 mains filters at **mains grounded via outer conductor**, install an isolating transformer between mains and mains filter.

Selecting the mains filter

☞ The specified mains filter types are exclusively suited for TN and TT mains.

The EMC limit values relate to line-based noise emission in the frequency range of 0.15 … 30 MHz on the mains connection lines.

HCS01.1E-W0005, -W0008, -W0018-A-03, -W00028, -W00054 Nominal voltage of mains filter: 3 × 400 V			
Clock frequency [kHz]	Leakage capacitance (motor + cable) [nF]	Mains filters	EMC limit value class to be achieved (IEC / EN 61800-3)
4; 8	< 100	NFD03.1 1)	C2
12; 16	< 30		

1) Leakage capacitances > 100 nF overload the mains filter (overtemperature, saturation phenomenon)

Tab. 4-36: Mains filter; 3 × 400 V

HCS01.1E-W0005, -W0008, -W0018-A-03, -W00028, -W00054 Nominal voltage of mains filter: 3 × 400 … 500 V			
Clock frequency [kHz]	Leakage capacitance (motor + cable) [nF]	Mains filters	EMC limit value class to be achieved (IEC / EN 61800-3)
4; 8	< 70	FN3258H (Schaffner)	C2
4; 8	70 < … < 100		C3
12; 16	< 20		C2
12; 16	20 < … < 50		C3

Tab. 4-37: Mains filter; 3 × 400 … 500 V

HCS01.1E-W0003, -W0006, -W0009, -W0013, -W0018-A-02 Nominal voltage of mains filter: 1 × 230 V			
Clock frequency [kHz]	Leakage capacitance (motor + cable) [nF]	Mains filters	EMC limit value class to be achieved (IEC / EN 61800-3)
4; 8	< 90	NFE02.1 1) FN350 (Schaffner)	C2
4; 8	90 < … < 120		C3
12	< 20		C2
12	20 < … < 40		C3

1) Only allowed up to a nominal current of 8 A

Tab. 4-38: Mains filter; 1 × 230 V

HCS01.1E-W0005, -W0008, -W0018-A-03, -W00028, -W00054, (mains voltage: 3 × 400 V, L1-L2-L3) can be combined with 1) HCS01.1E-W0003, -W0006, -W0009, -W0013, -W0018-A-02, (mains voltage: 1 × 230 V, L-N) Nominal voltage of mains filter: 3 × 400 V + N			
Clock frequency [kHz]	Leakage capacitance (motor + cable) [nF]	Mains filters	EMC limit value class to be achieved (IEC / EN 61800-3)
4	< 70	FN3280H (Schaffner)	C2
4	70 < … < 120		C3
4	< 70	FN3256H (Schaffner)	C3
8	< 40	FN3280H (Schaffner)	C2
8	40 < … < 70		C3
8	< 40	FN3256H (Schaffner)	C3
12	< 20	FN3280H (Schaffner)	C2

1) This combination allows 3-phase and 1-phase HCS01 devices to be interconnected at one common 4-phase mains filter. Thereby, the nominal current of the mains filter and the maximum allowed leakage capacitance are taken into account.

Tab. 4-39: Mains filter; 3 × 400 V + N

Limit Value Classes

IEC / EN 61800-3	CISPR 11 (EN55011)	Explanation	Curves of limit value characteristic
Category C4, 2nd environment	None	One of the following 3 requirements must have been fulfilled: Mains connection current >400 A, IT mains or required dynamic drive behavior not reached by means of EMC filter. Adjust limit values to use and operation on site. User has to carry out and provide evidence of EMC planning.	-
Category C3, 2nd environment	Class A; Group 2 I > 100 A	Limit value in industrial areas to be complied with for applications operated at supply mains with nominal currents > 100 A.	1.1 1.2

Combining the individual components

IEC / EN 61800-3	CISPR 11 (EN55011)	Explanation	Curves of limit value character-istic
Category C3, 2nd environ-ment	Class A; Group 2 I < 100 A	Limit value in industrial areas to be complied with for applications operat-ed at supply mains with nominal currents < 100 A.	2.1 2.2
Category C2, 1st environ-ment; Restricted dis-tribution	Class A; Group 1	Limit value in residential area or at facilities at low-voltage mains supply-ing buildings in residential areas. To be complied with for applications with restricted distribution.	3.1 3.2
Category C1, 1st environ-ment; Unrestricted distribution	Class B; Group 1	Limit value in residential areas to be complied with for applications with unrestricted distribution.	4.1 4.2

Tab. 4-40: Limit Value Classes

Combining the individual components

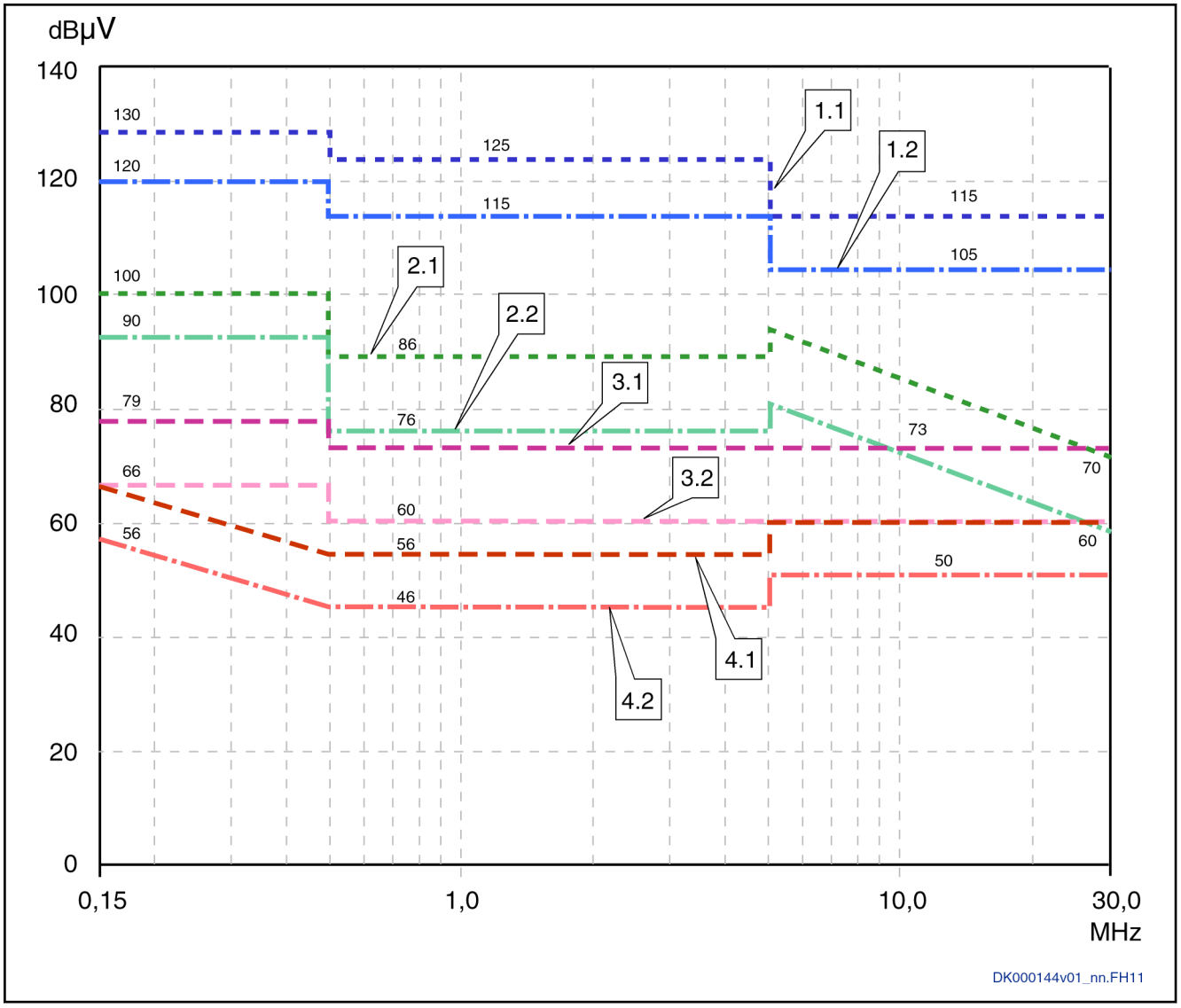

1.1	Category C3: Second environment, QSP, I > 100 A (class A, group 2, I > 100 A)
1.2	Category C3: Second environment, AV, I > 100 A (class A, group 2, I > 100 A)
2.1	Category C3: Second environment, QSP, I < 100 A (class A, group 2, I < 100 A)
2.2	Category C3: Second environment, AV, I < 100 A (class A, group 2, I < 100 A)
3.1	Category C2: First environment, restricted distribution, QSP (first environment, even if source of interference in second environment) (class A, group 1)
3.2	Category C2: First environment, restricted distribution, AV (first environment, even if source of interference in second environment) (class A, group 1)
4.1	Category C1: First environment, unrestricted distribution, QSP (first environment, even if source of interference in second environment) (class B, group 1)
4.2	Category C1: First environment, unrestricted distribution, AV (first environment, even if source of interference in second environment) (class B, group 1)

Notes (1) Limit value for first environment is also relevant, if source of interference of second environment affects first environment
(2) Designations "class" and "group" according to IEC CISPR 11
QSP: Measuring method quasi peak measurement; AV: Measuring method arithmetic averaging

Fig. 4-28: Limit Values for Line-Based Disturbances (IEC 61800-3); Limit Value Characteristic through Frequency Range

Determining the Mains Choke

When using mains chokes, take their effect on the connected drive controllers into account. Due to their inductance, mains chokes have a smoothing effect on the current and thereby reduce harmonics.

Take the nominal current of the mains choke into account to have the inductance of the mains choke available.

Some mains chokes are assigned to certain drive controllers (see technical data of the drive controller "Data for mains voltage supply → Assigned type of mains choke").

Dimensioning the mains contactor

Required data:

- Nominal current I_{LN} of the drive controller (see chapter 7.3.2 "Mains voltage" on page 233)
- Number of drive controllers connected to the mains contactor

When using mains contactors of the utilization category AC-1, observe the conventional thermal continuous current I_{th} (see data sheet of mains contactor) when dimensioning the mains contactor.

The minimum required conventional thermal continuous current I_{th} results from the sum of nominal currents ΣI_{LN} of all connected drive controllers.

Combining transformer, mains filter and mains choke

HCS01.1E	Transformer		Mains filter			Mains choke
	DST[3]	DLT[4]	NFE 02.1	NFD 03.1	HNF01.1*-****-**E****	HNL01.1**E**
W0003 W0006 W0009 W0013 W0018-A-02	■	■	■	■	[1]	-
W0005 W0008 W0018-A-03 W0028 W0054	■	■	-	■	[1]	■[2]

■ Allowed
- Not allowed
1) We are currently checking whether it is possible to combine HNF mains filters and several HCS01 components.
2) Only possible with -W0028 and -W0054 components
3) DST = Autotransformer
4) DLT = Isolating transformer

Tab. 4-41: Additional Components in the Mains Connection of HCS01 Components

Control Circuit for the Mains Connection

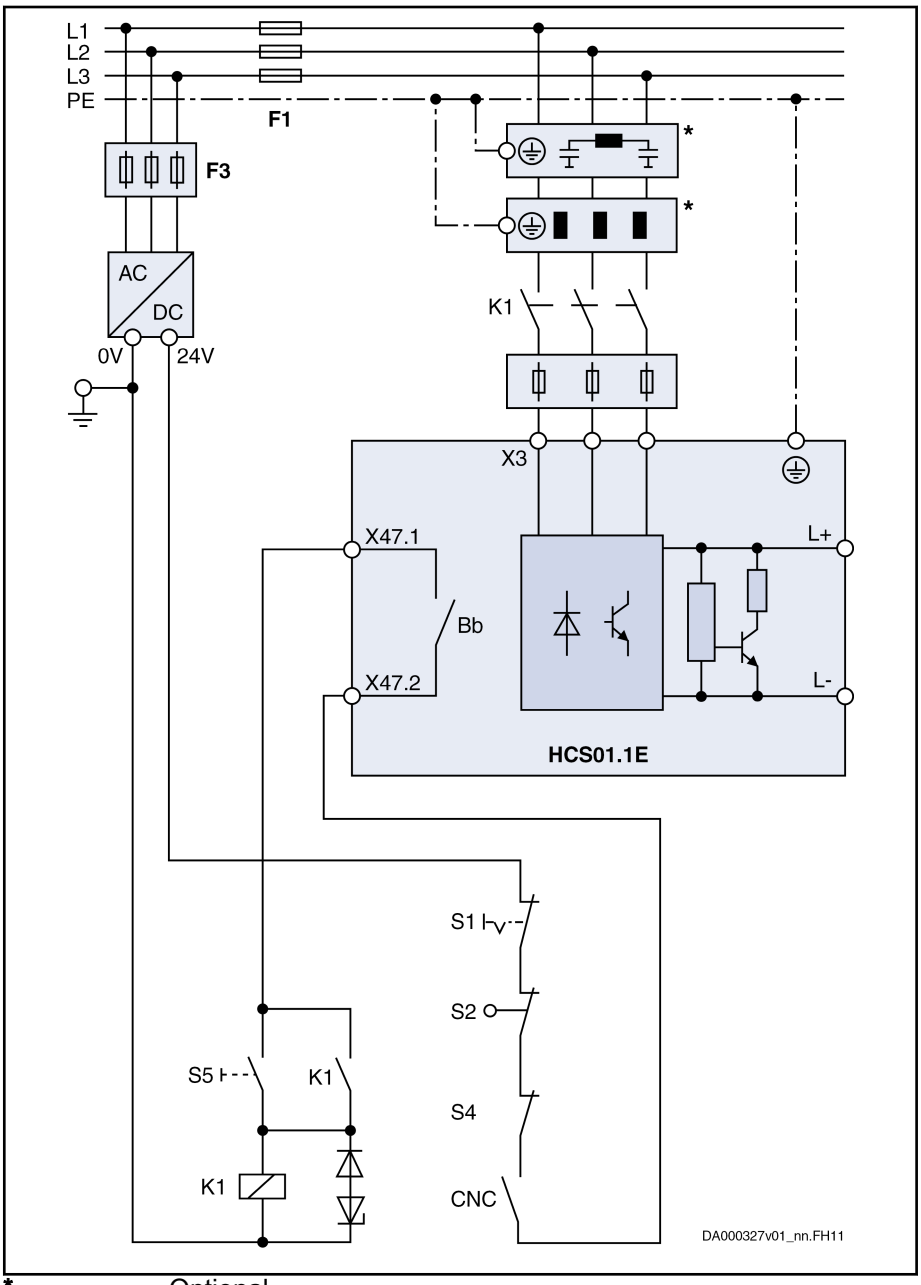

*	Optional
Bb	Bb relay contact (see chapter "X47, Bb relay contact, module bus" on page 149)
CNC	Lag error message of control unit
F1	Fuse of power supply
F3	Fuse of 24V power supply unit
K1	External mains contactor
S1	Emergency stop
S2	Axis end position
S4	Power Off
S5	Power On

Fig. 4-29: Control Circuit for the Mains Connection

4.6.4 DC bus coupling

Requirements for DC bus coupling

Device types

Only devices of the "HCS01.1E-W00**-*-03" type are suited for DC bus coupling. DC bus coupling takes place via the optionally available DC bus connector RLS0778/K06 at the connection point X77.

☞ **Parameterization:** For all devices only supplied via the DC bus, "DC bus → inverter mode" has to be set as the source of power supply in the parameter "P-0-0860, Converter configuration" (see also parameter description of the firmware used).

Number

A **maximum of 8** devices can be coupled at a common DC bus.

Mains connection

DC bus coupling is possible for the following types of mains connection:

- **Central supply**
- **Group supply**

DC bus coupling requires:

- That the Bb contacts of all devices connected to the mains be wired
- That the module bus be wired via all devices at the common DC bus

Central supply and DC bus coupling

Use this type of DC bus coupling if the DC bus continuous power of the infeeding device makes available sufficient power reserves to supply other HCS01 devices. The devices in the group can be of different types. For the project planning of the application, observe that the supplying devices can only make available the DC bus power for other devices which they do not consume themselves.

With central supply, **one HCS01 device** charges the DC bus and the other devices are supplied using DC bus coupling.

Features

- The supplying device has to be of the **HCS01.1E-W0028 or -W0054** type
- Energy compensation between the devices is possible (the DC bus capacitors of the devices are connected in parallel)
- Balancing of the integrated braking resistors exists (equal load of all braking resistors integrated in the devices)
- No balancing measures required in the supply feeder
- To increase the DC bus power, an optional mains choke can be used
- It is possible to connect DC bus capacitor units; DC bus capacitor units should always be placed directly next to the most powerful device

  A DC bus capacitor unit HLC requires a mains choke to be installed
- Small wiring effort for the mains connection
- DC bus short circuit functionality has to be realized externally, if required

Combining the individual components

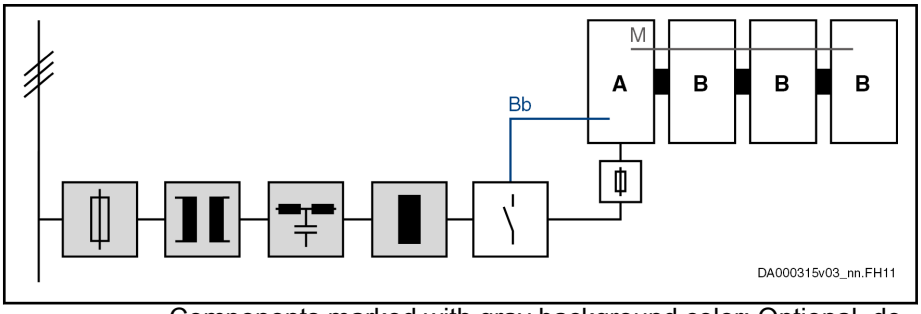

Components marked with gray background color: Optional, depending on the application

A Component HCS01 (more powerful than component B); connected to other components via DC bus

B Component HCS01 (less powerful than component A); connected to other components via DC bus

Bb Bb relay contact wiring

M Module bus

Fig. 4-30: Central Supply

Group supply and DC bus coupling

DC bus coupling options

For group supply with DC bus coupling, there are **two options**:

1. **At least two devices** supply the DC bus and other devices are supplied via th common DC bus connection
2. **All devices** with common DC bus connection supply the DC bus

---

When sizing the devices for group supply, observe the **balancing factor**:

- 0.8 (if balancing is used)
- 0.5 (if balancing is not used)

With group supply, the **Bb relay contacts of all supplying devices have to be connected in series**. This guarantees that the mains contactor is switched off in the case of error in a device.

The DC bus coupling **lines** should not be run outside of the control cabinet. The maximum line length of a DC bus coupling is 2 m. See also description of the connection point X77 for more information (chapter "X77, L+ L-, DC Bus Connection" on page 151).

Balancing: To distribute the charging process of the DC bus equally over all supplying devices, balancing chokes or balancing resistors have to be installed in the supply feeder.

Balancing choke

- HCS01.1E-W0028: Mains choke HNL01.1E-1000-N0012-A-500-NNNN
- HCS01.1E-W0054: Mains choke HNL01.1E-0600-N0032-A-500-NNNN

The firmware provides for the balancing of the power over all braking resistors. See also the documentation of the firmware used (parameter "P-0-0860, Converter configuration").

☞ The parallel connection of the braking resistors causes **derating/ reduction of power** of the continuous braking resistor power to the factor 0.8.

Supply via at least two devices

Use this type of DC bus coupling if you use **different HCS01 device types** in your application.

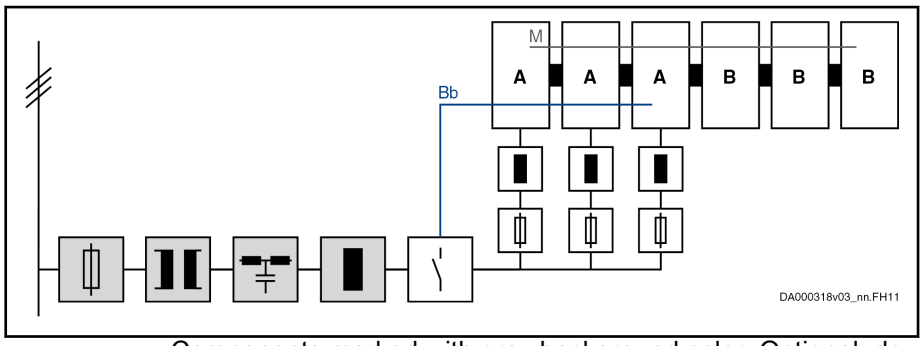

Components marked with gray background color: Optional, depending on the application; the choke is used to reduce current harmonics

A Component HCS01 (more powerful than component B; all components A identical); connected to supply mains via balancing chokes; connected to other components via DC bus

B Component HCS01 (less powerful than component A); connected to other components via DC bus

Bb Bb relay contact wiring

M Module bus

Fig. 4-31: Group Supply; Several HCS01 Components Connected to Supply Mains

Features

- The supplying devices[3] [4] have to be of the same type. The following devices are suited as supplying devices:
  - HCS01.1E-W0028
  - HCS01.1E-W0054
- DC bus continuous power of the supplying devices reduced by parallel operation
- Energy compensation between the devices is possible (the DC bus capacitors of the devices are connected in parallel)
- Balancing of the integrated braking resistors exists (equal load of all braking resistors integrated in the devices)
- Balancing chokes or balancing resistors required in supply feeder
- It is possible to connect DC bus capacitor units
- Wiring effort for the mains connection relatively small
- It is possible to use a common mains contactor, as well as a common mains filter
- DC bus short circuit functionality has to be realized externally, if required

[3] ***Supplying*** *devices are devices connected to the mains which supply power to other devices via a DC bus connection*

[4] ***Supplied*** *devices are devices not connected to the mains which are supplied with power by the supplying devices via a DC bus connection*

Combining the individual components

Supply via all devices

Use this type of DC bus coupling if you exclusively use **one HCS01 device type** in your application.

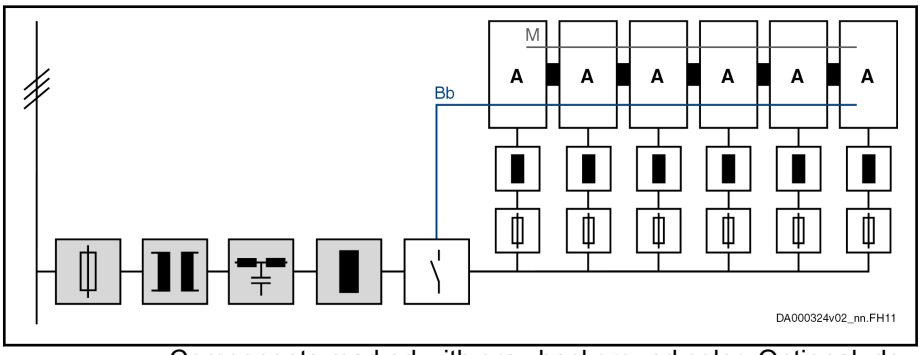

	Components marked with gray background color: Optional, depending on the application; the choke is used to reduce current harmonics
A	Component HCS01 (all components A identical); connected to supply mains via balancing chokes; interconnected via DC bus
Bb	Bb relay contact wiring
M	Module bus (not obligatory)

Fig. 4-32: Group Supply; all HCS01 Components Connected to Supply Mains

Features

- All devices have to be of the **same type**
- DC bus continuous power of the supplying devices reduced by parallel operation
- Energy compensation between the devices is possible (the DC bus capacitors of the devices are connected in parallel)
- Balancing of the integrated braking resistors exists (equal load of all braking resistors integrated in the devices)
- Balancing chokes or balancing resistors required in supply feeder
- It is possible to connect DC bus capacitor units
- Wiring effort for the mains connection of all devices relatively big
- DC bus short circuit functionality has to be realized externally, if required

Implementing the DC bus coupling

Maximum number of devices

A **maximum of 8** devices can be coupled at a common DC bus.

The maximum number of devices which can be interconnected via DC bus coupling depends on

- the power reserves of the supplying devices

  (The power reserve ($P_{reserve}$) results from the difference between the possible DC bus continuous power of the device and the power consumed by the motor connected to the device.)
- the type of DC bus connection:
  - Connection looped through via DC bus connector X77
  - DC bus connecting bar with spur lines to the individual devices
- the sum of DC bus continuous powers of all supplied devices
- the mains voltage value

- the maximum continuous power which can be looped through via the DC bus connector X77

  (The continuous power results from the current carrying capacity of the DC bus connector X77 and the mains voltage value.)

Load of DC Bus Connector at I = 25 A:

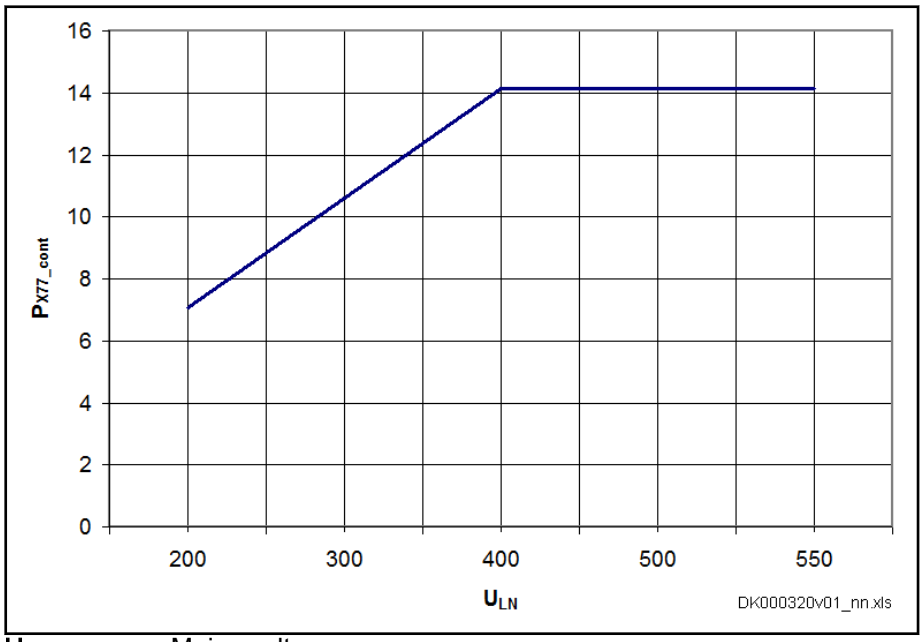

U_{LN} Mains voltage
P_{X77_cont} Continuous power at DC bus connector X77

Fig. 4-33: Load of DC Bus Connector

V_{LN}	P_{X77_cont}
200 V AC	7 kW
400 V AC	14 kW
500 V AC	14 kW

Tab. 4-42: Selected values of continuous power via DC bus connector X77 (P_{X77_cont}) depending on mains voltage

Number of supplied devices:

If the sum of power reserves ($P_{reserve}$) of the supplying devices is **greater then** the continuous power of X77 (P_{X77_cont}), the maximum number of supplied devices results from P_{X77_cont} minus the respective DC bus continuous power of the individual devices at average speed.

If the sum of power reserves ($P_{reserve}$) of the supplying devices is **smaller** than the continuous power of X77 (P_{X77_cont}), the maximum number of supplied devices results from $P_{reserve}$ minus the respective DC bus continuous power of the individual devices at average speed.

Combining the individual components

Looping through the DC bus connection via DC bus connector X77

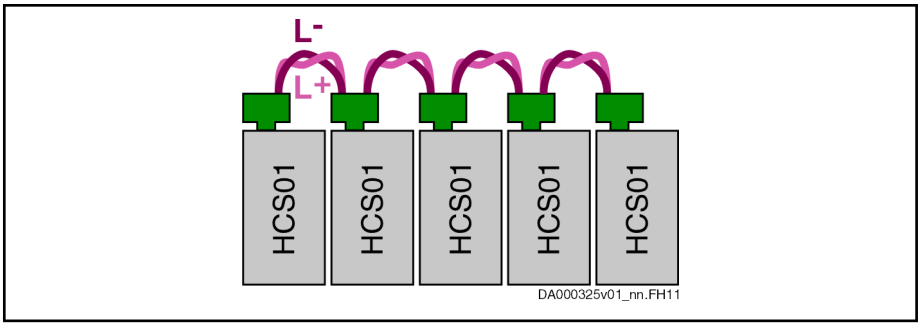

Fig. 4-34: Looping through via DC bus connector

The DC buses of the individual devices are connected via the DC bus connectors X77.

When the devices are supplied via group supply, the DC bus connector X77 of the last infeeding device is the limiting factor in the DC bus group.

☞ **Device arrangement:** The higher the power consumption of a device, the nearer to the supplying devices it has to be arranged.

Example:

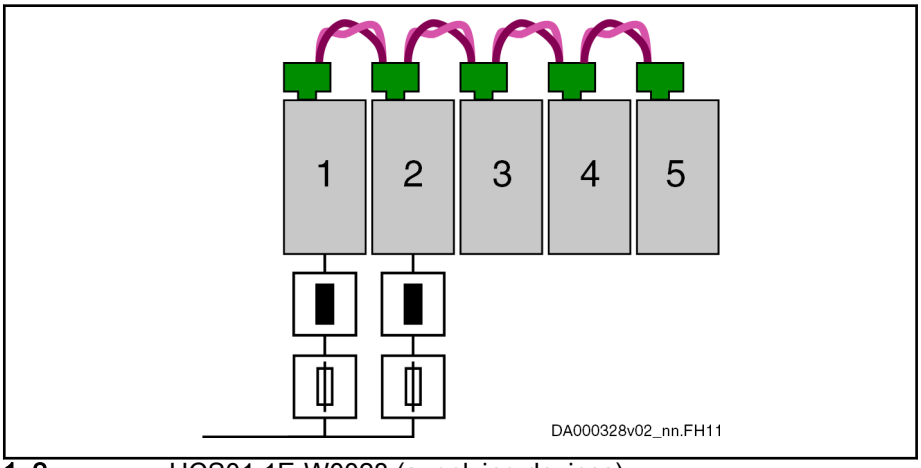

1, 2 HCS01.1E-W0028 (supplying devices)
3, 4, 5 HCS01.1E-W0018 (supplied devices)

Fig. 4-35: Looping through

On the left, the two supplying HCS01.1E-W0028 devices have been arranged; to their right the three supplied HCS01.1E-W0018 devices.

The DC bus connector of the second device from the left (2) limits the possible number of devices at the common DC bus.

DC bus connecting bar

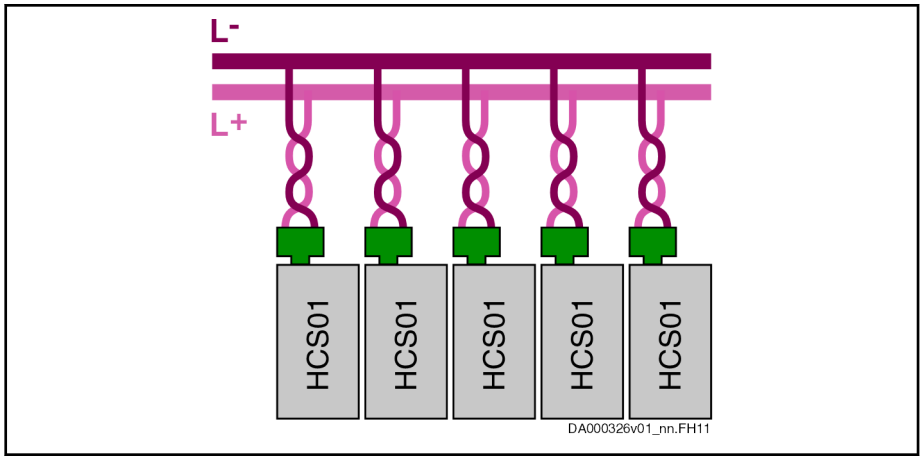

Fig. 4-36: DC bus connection via connecting bar

Via a "spur line", the DC buses of the individual devices are connected to the DC bus connecting bar.

The power reserve of the supplying devices limits the number of devices at the common DC bus.

DC Bus Capacitor Unit

Function

DC bus capacitor units are optional additional components and increase

- the DC bus continuous power
- the available DC bus energy

Mains Choke

Always operate the DC bus capacitor units together with the mains choke assigned to the drive controller (see chapter 7.3.2 "Mains voltage" on page 233).

Special case "HCS01.1E-W0018-_-03" (in the technical data, no mains choke has been assigned to this drive controller):

Use the mains choke "HNL01.1E-1000-N0012-A-500-NNNN".

Connection

The maximum allowed capacitance of a DC bus capacitor unit depends on the device which assumes the DC bus supply.

☞ Even if several devices supply the DC bus, the specific external DC bus capacitance of the biggest supplying device may only be connected **once** for the entire DC bus group!

For the maximum allowed external DC bus capacitance at U_{LN_nenn}, see the technical data (chapter 7.3.3 "DC bus" on page 240).

Maximum Allowed External DC Bus Capacitance [mF] vs. Mains Voltage

HCS01.1E-	Mains voltage			
	400 V	440 V	480 V	500 V
W0018-A-03	3	2	1	-
W0028-A-03	4	3	1	-
W0054-A-03	13	9	6	5

Tab. 4-43: Maximum Allowed External DC Bus Capacitance (in mF)

If possible, place the DC bus capacitor unit directly next to the drive controller to be supplied or the most powerful drive controller. Connect the DC bus capacitor unit to the drive controller via the DC bus connection X77.

See also chapter 8.3.5 "DC bus capacitor units HLC" on page 309

Module bus and parameterization

Module bus

The module bus is an internal system connection. To ensure the coordinated behavior of all devices of a drive system, the devices have to exchange information via the module bus.

With the parameter "P-0-0118, Power supply, configuration", both a common error reaction for all axes and power off in the case of error can be parameterized.

☞ If several devices are coupled via the DC bus, it is mandatory to loop through the module bus.

Use **shielded lines** to loop through the module bus, if the length of all module bus connections is **greater than 3 m**. See chapter " Module bus cable shield connection" on page 256.

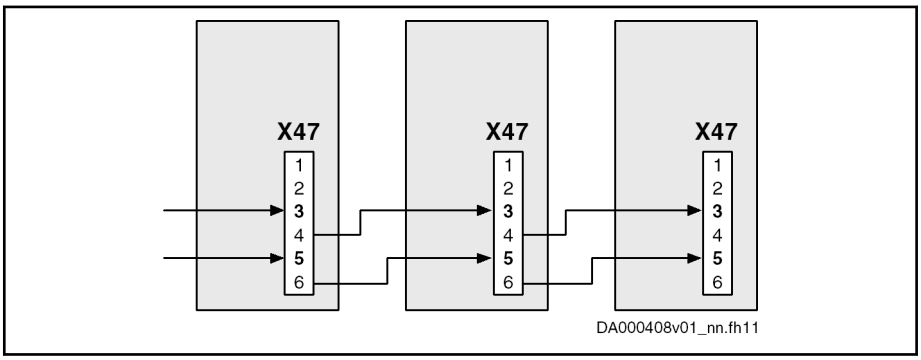

Fig. 4-37: Looping through the module bus

Parameterization

For all devices only supplied via the DC bus, "DC bus → inverter mode" has to be set as the source of power supply in the parameter "P-0-0860, Converter configuration".

For detailed information, see the documentation of the firmware used:

- Parameter description:
  - P-0-0860, Converter configuration
  - P-0-0118, Power supply, configuration
- Functional description: "Power supply"

Bb relay contact

Generally, the following applies: Include the Bb contact in the mains contactor circuit at all devices connected to the mains. (See also chapter "Control Circuit for the Mains Connection" on page 104)

If several devices supply the DC bus (group supply), connect the Bb relay contacts (X47) of all **supplying** devices in series. This guarantees that the mains contactor is switched off in the case of error in a device.

For devices which are only supplied via the DC bus, it is sufficient that you establish the module bus connection. You do not need to connect the Bb relay contacts of these devices in series.

NOTICE **Risk of fire in the case of error caused by missing mains contactor control!**

Include the Bb relay contact in the switch-off chain of the mains contactor so that the power supply is interrupted in the case of error.

4.7 Acceptance tests and approvals

Declaration of conformity

Declarations of conformity confirm that the components comply with the valid EN standards and EC directives. If required, our sales representative can provide you with the declarations of conformity for components.

	Drive controllers, Supply units	Motors
CE conformity regarding Low-Voltage Directive	EN 61800-5-1:2007	EN 60034-1:2010+Cor.:2010 EN 60034-5:2001+A1:2007
CE conformity regarding EMC product standard	EN 61800-3:2004 + A1:2012	

Tab. 4-44: CE - applied standards

C-UL-US listing

The components are listed by **UL** (Underwriters Laboratories Inc.®).

Proof of certification can be found online:

www.ul.com/database

Under "UL File Number" enter the file number or under "Company Name" enter the company name "Bosch Rexroth AG".

Listed **POW. CONV. EQ.** **97Y4**	• UL standard: UL 508C • CSA standard: Canadian National Standard C22.2 No. 14-10
	Company Name BOSCH REXROTH ELECTRIC DRIVES & CONTROLS GMBH Category Name: Power Conversion Equipment
	File numbers Rexroth IndraDrive Cs components: • E134201 • E227957

Tab. 4-45: C-UL listing

UL ratings

When using the component in the scope of CSA/UL, observe the UL ratings for each component.

Make sure that the indicated **SCCR short-circuit rating** is not exceeded, e.g., by using appropriate fuses in the mains connection of the supply unit.

Wiring material UL

In the scope of CSA / UL, use copper 60/75 °C only; class 1 or equivalent only.

Allowed pollution degree

Comply with the permitted pollution degree of the components (see "Ambient and operating conditions").

C-UR-US listing

The components are listed by **UL** (Underwriters Laboratories Inc.®).

Proof of certification can be found online:

www.ul.com/database

Under "UL File Number" enter the file number or under "Company Name" enter the company name "Bosch Rexroth AG".

CUR_Zeichen.fh11	• UL standard: UL 1004-1 • CSA standard: Canadian National Standard C22.2 No. 100
	Company Name BOSCH REXROTH ELECTRIC DRIVES & CONTROLS GMBH Category Name: Servo and Stepper Motors - Component
	File numbers MSK, MSM motors: E335445

Tab. 4-46: C-UR listing

Wiring material UL (ready-made cables by Rexroth)

In the scope of CSA / UL, use copper 60/75 °C only; class 6 or equivalent only.

Allowed pollution degree

Comply with the permitted pollution degree of the components (see "Ambient and operating conditions").

CCC (China Compulsory Certification)

The CCC mark is a compulsory certification of safety and quality for certain products mentioned in the product catalog "First Catalogue of Products Subject to Compulsory Certification" and in the CNCA document "Application Scope for Compulsory Certification of Products acc. first Catalogue" and put in circulation in China. This compulsory certification has existed since 2003.

CNCA is the Chinese authority responsible for certification guidelines. When a product is imported in China, the certification will be checked at customs using the entries in a database. Three criteria are typically critical for certification being required:

1. Customs tariff number (HS code) according to CNCA document "Application Scope for Compulsory Certification of Products acc. first Catalogue".
2. Area of application according to CNCA document "Application Scope for Compulsory Certification of Products acc. first Catalogue".
3. For the IEC product standard used, a corresponding Chinese GB standard must exist.

Combining the individual components

For the drive components by Rexroth described in this documentation, **certification is currently not required**, so they are not CCC certified. Negative certifications will not be issued.

5 Condition as supplied, identification, transport and storage

5.1 Condition as supplied

5.1.1 Factory testing

Voltage testing and insulation resistance testing

According to standard, the **components** of the Rexroth IndraDrive Cs range are tested with voltage.

Testing	Test rate
Voltage testing	100% (EN 61800-5-1)
Insulation resistance testing	100% (EN 60204-1)

Tab. 5-1: Applied standards

5.1.2 Customer testing

NOTICE **Risk of damage to the installed Rexroth components by customer-side testing of the machine or installation!**

Before conducting voltage testing or insulation resistance testing for an **installation or machine** in which these components are used:

Disconnect all connections to the Rexroth components or disconnect the plug-in connections to protect the electronic components.

5.2 Identification

5.2.1 Type Plates

Arrangement

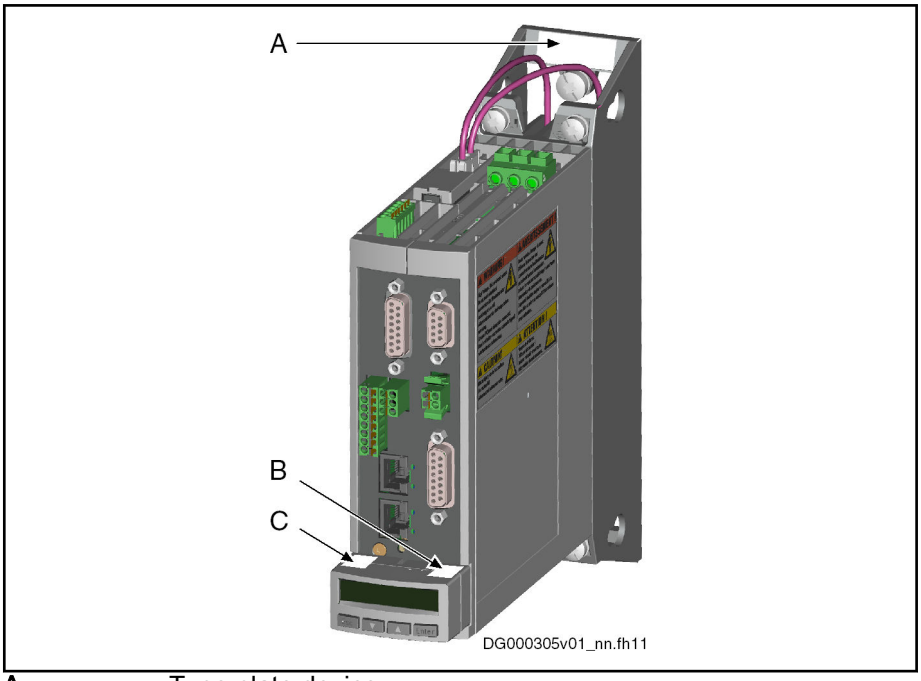

A	Type plate device
B	Type plate firmware
C	Type plate control panel

Fig. 5-1: Type Plate Arrangement

Design

Type plate (device)

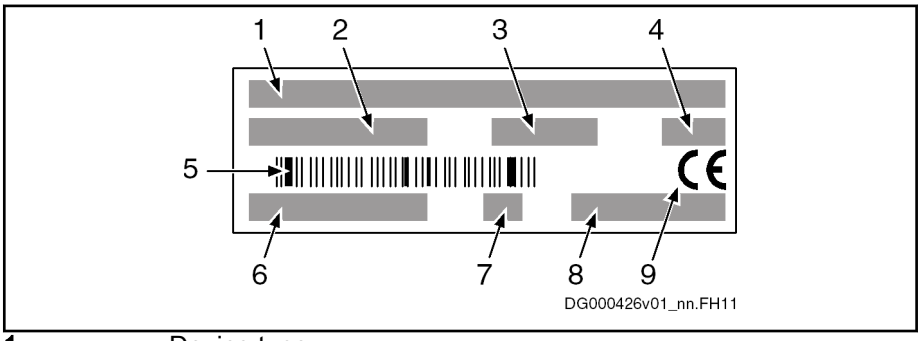

1	Device type
2	Part number
3	Production week; 11W36, for example, means year 2011, week 36
4	Factory identifier
5	Bar code
6	Serial number
7	Hardware index
8	Country of manufacture
9	Identification

Fig. 5-2: Type plate (device)

Type Plate (Firmware)

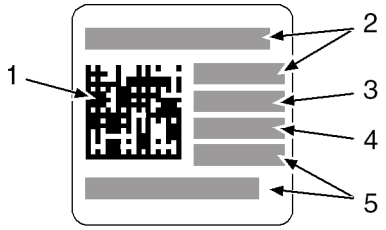

1	Bar code
2	Type
3	Factory identifier
4	Production week (example: 11W36 means: year 2011, week 36)
5	Part number

Fig. 5-3: Type Plate (Firmware)

Type Plate (Control Panel)

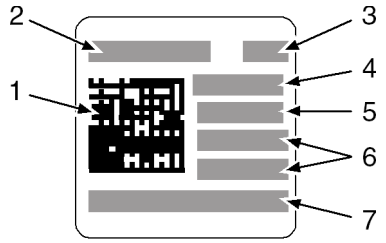

1	Bar code
2	Type
3	Hardware index
4	Factory identifier
5	Production week (example: 11W36 means: year 2011, week 36)
6	Part number
7	Serial number

Fig. 5-4: Type Plate (Control Panel)

5.2.2 Scope of supply

Standard	To be ordered separately
Drive controller HCS01	DC bus connector X77 (DC bus connection; for HCS01.1E-W00xx-x-**03** devices) Order code: RLS0778/K06
Mounting and connection accessories HAS09	microSD memory card: • PFM04.1-512-**F**W (with firmware) • PFM04.1-512-**N**W (without firmware)
Connectors X3, X5, X6, X13, X31, X32, X47	Other accessories, such as SUP-E0x-MSM-BATTERYBOX
Touch guard X77 (DC bus connection; for HCS01.1E-W00xx-x-**03** devices)	
Documentation	

Tab. 5-2: Scope of supply HCS01

5.3 Transporting the components

Ambient and operating conditions for transport

Description	Symbol	Unit	Value
Temperature range	T_{a_tran}	°C	-20 … +70
Relative humidity		%	5 … 95
Absolute humidity		g/m^3	1 … 60
Climatic category (IEC 721)			2K3
Moisture condensation			Not allowed
Icing			Not allowed

Tab. 5-3: Ambient and operating conditions for transport

5.4 Storing the components

NOTICE **Risk of damage to components from long-term storage!**

Some components contain electrolytic capacitors which may deteriorate during storage.

When storing the following components for a longer period of time, run them **once a year for at least 1 hour**:

- Converters and supply units: Operated with mains voltage U_{LN}
- Inverters and DC bus capacitor units: Operated with DC bus voltage U_{DC}

Ambient and operating conditions for storage

Description	Symbol	Unit	Value
Temperature range	T_{a_store}	°C	-20 … +55
Relative humidity		%	5 … 95
Absolute humidity		g/m^3	1 … 29
Climatic category (IEC 721)			1K3
Moisture condensation			Not allowed
Icing			Not allowed

Tab. 5-4: Ambient and operating conditions for storage

6 Mounting and installation

6.1 Mounting HCS01 Devices in the Control Cabinet

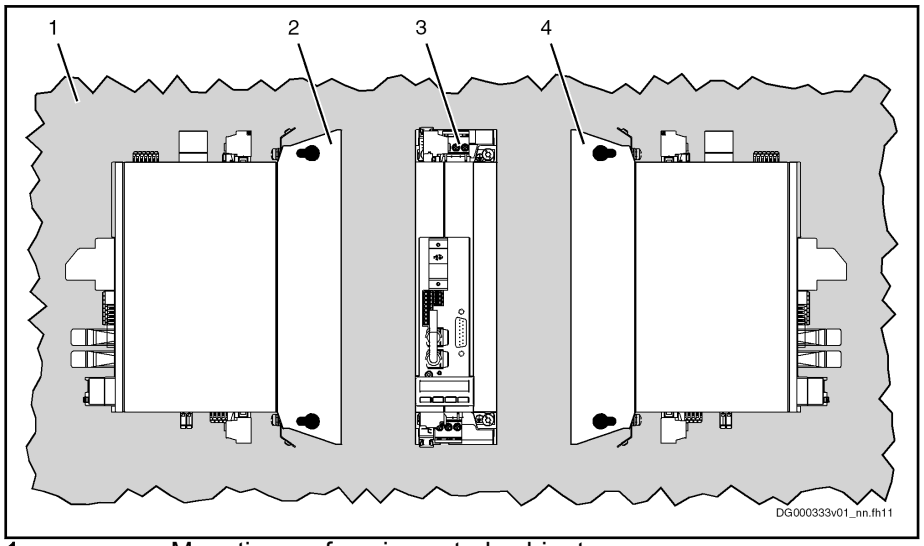

1 Mounting surface in control cabinet
2 Left-hand mounting
3 Back-side mounting (standard mounting)
4 Right-hand mounting

Fig. 6-1: Options for Mounting

Notes on Mounting

- Observe the **minimum distances** to be complied with for mounting (see technical data or dimensional drawings).

  The specified horizontal minimum distance refers to the distance to neighboring devices or equipment installed in the control cabinet (such as cable ducts) and not to the distance to the control cabinet wall.

- The **back-side mounting** (back of device directly mounted to mounting surface in control cabinet) is the standard and should be used, if possible.

- The **left-hand or right-hand mounting** (left or right side of device directly mounted to mounting surface in control cabinet) can be used, if the mounting clearance between control cabinet wall and control cabinet front is not sufficient for back-side mounting.

  NOTICE! Risk of damage by high temperatures! At the **back of the HCS01 devices**, there are **braking resistors** which can become very hot during operation. When arranging the devices in the control cabinet, make sure there aren't any heat-sensitive materials close to the braking resistors.

  In the case of left-hand or right-hand mounting, you **must not pile the devices**. Each device must have immediate contact to the control cabinet wall.

- **Tightening torque** of the mounting screws: **6 Nm**

- On the sides of the devices, there are **adhesive labels with notes on safety**. The supplied accessory HAS09 additionally contains these adhesive labels. If the adhesive labels at the devices are no longer visible after mounting, place the adhesive labels from the HAS09 accessory clearly visibly at the device or in the immediate vicinity of the device.

Required Steps to Follow

HCS01 drive controllers were designed for control cabinet mounting. They are mounted with two screws (M6×20; contained in the supplied accessory HAS09).

Mounting the drive controller

1. Fix screws to the back panel of the control cabinet.
2. Attach the drive controller to the screws.
3. Fix the screws with 6 Nm.

6.2 Electrical connection

6.2.1 Overall connection diagram

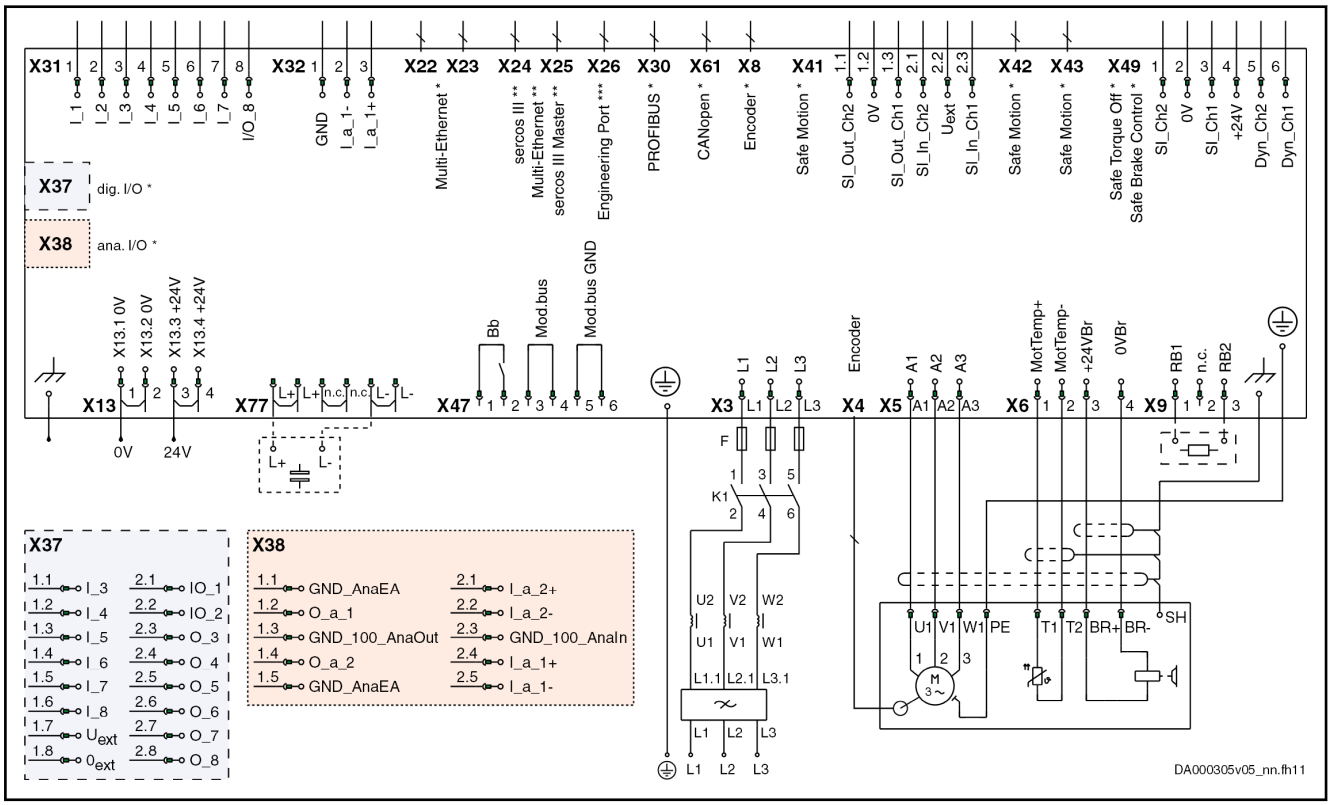

*	Optional
**	**ECONOMY** = sercos III; **BASIC** = Multi-Ethernet; **ADVANCED** = sercos III master
***	Only exists at ADVANCED devices and devices with Engineering Port (EP option)
X6.1, X6.2	T1 and T2 are not available at MSM motors. For proper function of the motor thermal management connect the motor thermal sensor as described in the wiring diagram. Otherwise motor overtemperature sensing is not provided by the drive. For Rexroth motors with data memory in the motor encoder, such as MSK, the motor overload protection level is set automatically while connecting the motor to the drive. There is no adjustment necessary. Otherwise refer to the Rexroth firmware documentation.
X31	No standard assignment preset; make the assignment by means of firmware documentation (see Functional Description, index entry "Digital inputs/outputs")
X47.1, X47.2	For the "ready for operation" message of the device, the Bb relay contact (X47.1, X47.2) has to be wired
X47.3…6	Module bus only available at HCS01.1E-W00xx-x-03 devices
X77	DC bus connection (L+, L-) only available at HCS01.1E-W00xx-x-03 devices

Fig. 6-2: Connection diagram

Mounting and installation

6.2.2 Connection points

Arrangement of the HCS01 connection points

HCS01 connection points (ECONOMY, BASIC)

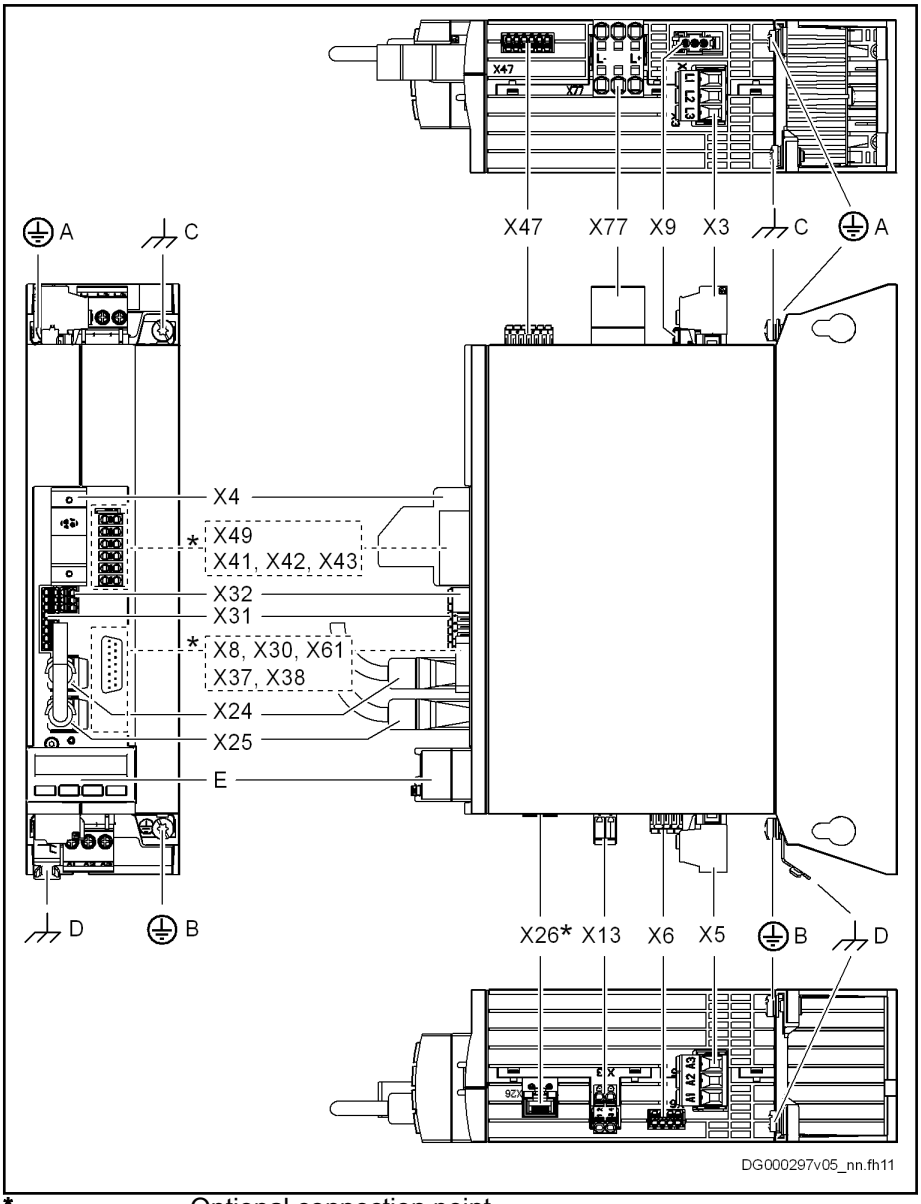

*	Optional connection point
A	Connection point of equipment grounding conductor, mains
B	Connection point of equipment grounding conductor, motor
C	Control line shield connection
D	Motor cable shield connection
E	Control panel
X3	Mains connection
X4	Motor encoder
X5	Motor connection
X6	Motor temperature monitoring, motor holding brake
X8	Encoder evaluation (EC option); encoder emulation (EM option)
X9	Integrated/external braking resistor
X13	24V supply (control voltage)

X24 / X25	ECONOMY: sercos III communication; BASIC: Multi-Ethernet communication
X26	Engineering interface
X30	PROFIBUS communication (PB option)
X31	Digital inputs, digital output
X32	Analog input
X37	Digital inputs/outputs (DA option)
X38	Analog inputs/outputs (DA option)
X41, X42, X43	Safety technology (S4, S5 option: Safe Motion)
X47	Bb relay contact, module bus (module bus at HCS01.1E-W00xx-x-03 devices only)
X49	Safety technology (L3 option: Safe Torque Off; L4 option: Safe Torque Off, Safe Brake Control)
X61	CANopen communication (CN option)
X77	DC bus connection (at HCS01.1E-W00xx-x-03 devices only); DC bus connector optionally available (if the DC bus connector is not used, the DC bus connection must be covered with the supplied touch guard)

Fig. 6-3: HCS01 connection points

Mounting and installation

HCS01 connection points (ADVANCED)

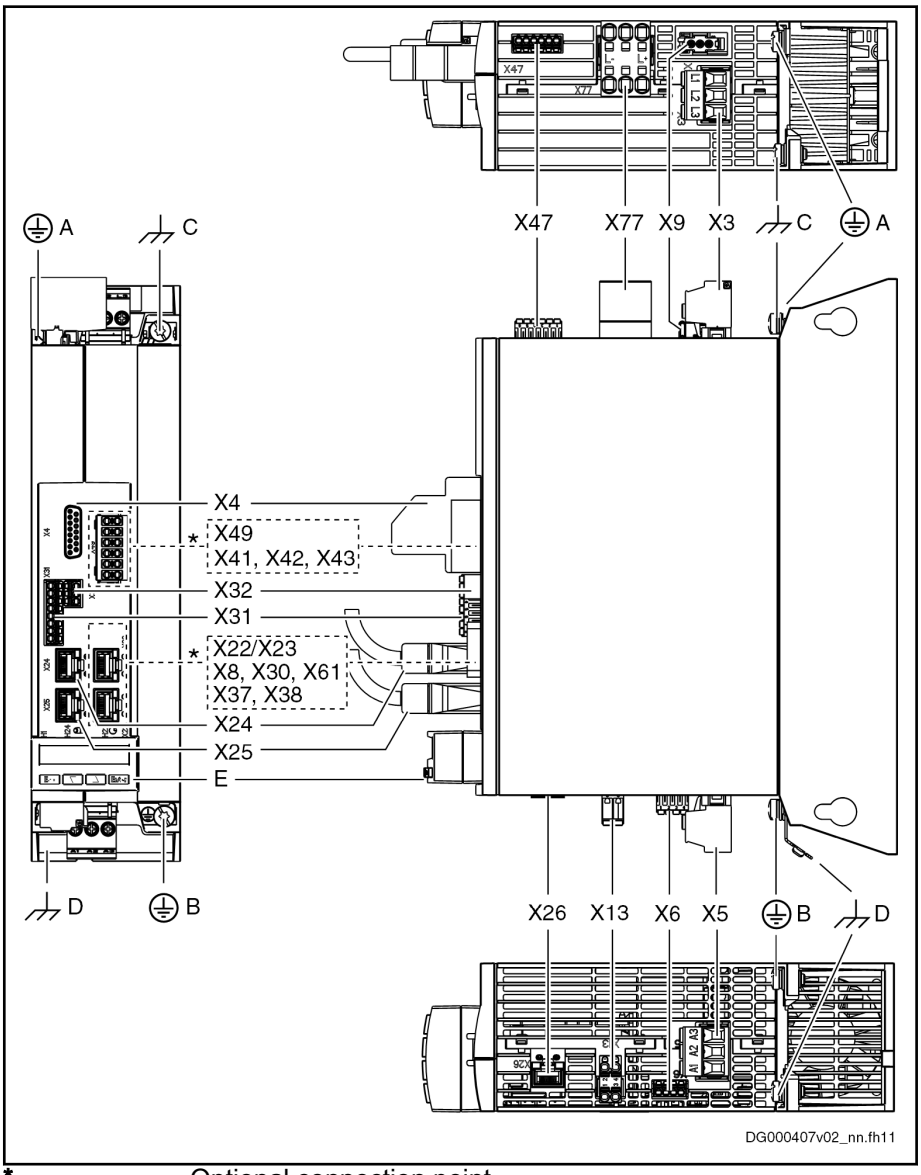

*	Optional connection point
A	Connection point of equipment grounding conductor, mains
B	Connection point of equipment grounding conductor, motor
C	Control line shield connection
D	Motor cable shield connection
E	Control panel
X3	Mains connection
X4	Motor encoder
X5	Motor connection
X6	Motor temperature monitoring, motor holding brake
X8	Encoder evaluation (EC option); encoder emulation (EM option)
X9	Integrated/external braking resistor
X13	24V supply (control voltage)
X22 / X23	Multi-Ethernet communication (ET option)
X24 / X25	sercos III master
X26	Engineering interface
X30	PROFIBUS communication (PB option)

X31	Digital inputs, digital output
X32	Analog input
X37	Digital inputs/outputs (DA option)
X38	Analog inputs/outputs (DA option)
X41, X42, X43	Safety technology (S4, S5 option: Safe Motion)
X47	Bb relay contact, module bus (module bus at HCS01.1E-W00xx-x-03 devices only)
X49	Safety technology (L3 option: Safe Torque Off; L4 option: Safe Torque Off, Safe Brake Control)
X61	CANopen communication (CN option)
X77	DC bus connection (at HCS01.1E-W00xx-x-03 devices only); DC bus connector optionally available (if the DC bus connector is not used, the DC bus connection must be covered with the supplied touch guard)

Fig. 6-4: HCS01 connection points

6.2.3 On-board connection points

Connection of Equipment Grounding Conductor

⚠ WARNING **High housing voltage and high leakage current! Danger to life, risk of injury by electric shock!**

- Before switching on and before commissioning, ground or connect the components of the electric drive and control system to the equipment grounding conductor at the grounding points.
- Connect the equipment grounding conductor of the components of the electric drive and control system permanently to the main power supply at all times. The leakage current is greater than 3.5 mA.
- Establish an equipment grounding connection with a copper wire of a cross section of at least 10 mm^2 (8 AWG) or additionally run a second equipment grounding conductor of the same cross section as the original equipment grounding conductor.

⚠ WARNING **Lethal electric shock by live parts with more than 50 V!**

Exclusively operate the device

- with plugged on connectors (even if there haven't been any lines connected to the connectors) and
- with connected equipment grounding conductor!

Equipment grounding conductor: Material and cross section

For the equipment grounding conductor, use the same metal (e.g. copper) as for the outer conductors.

For the connections from the equipment grounding conductor connection of the device to the equipment grounding conductor system in the control cabinet, make sure the cross sections of the lines are sufficient.

Cross sections of the equipment grounding connections:

For **HCS01** drive controllers, **at least 10 mm²**, but not smaller than the cross sections of the outer conductors of the mains supply feeder.

Additionally, mount the housing to a bare metal mounting plate. Connect the mounting plate, too, with at least the same cross section to the equipment grounding conductor system in the control cabinet.

Installation

Connect the equipment grounding conductor of the mains or motor cable via thread **M5** to the housing of the device (identification mark ⏚; tightening torque: **5 Nm**). The screws **M5×12** required for this purpose are part of the supplied accessory HAS09.

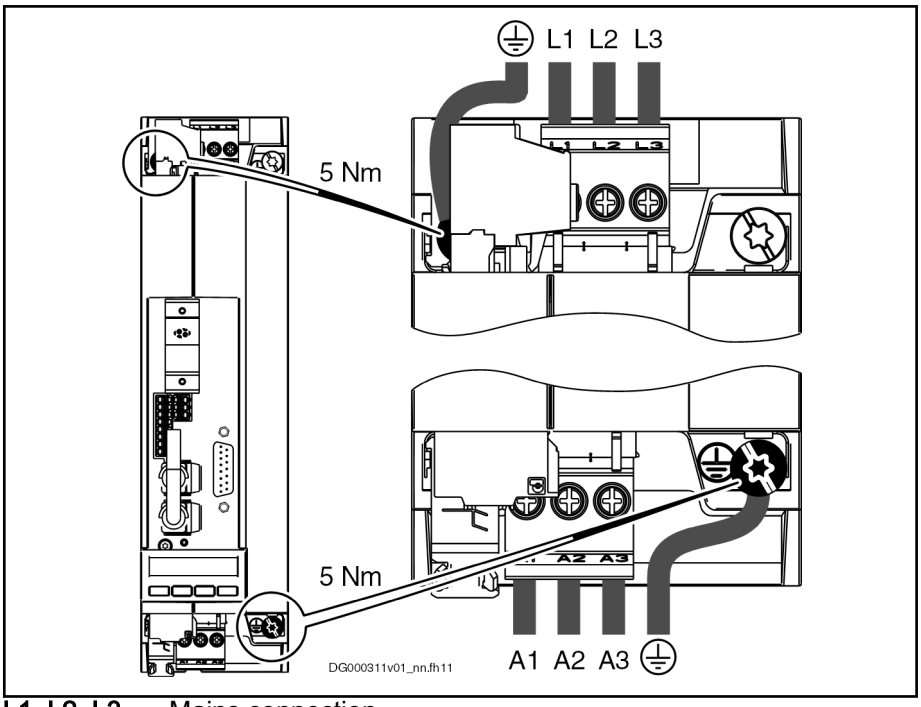

L1, L2, L3 Mains connection
A1, A2, A3 Motor connection

Fig. 6-5: Connection Point of Equipment Grounding Conductor

X3, mains connection

Important notes

⚠ WARNING **Lethal electric shock by live parts with more than 50 V!**

Exclusively operate the device

- with plugged on connectors (even if there haven't been any lines connected to the connectors) and
- with connected equipment grounding conductor!

Notes on installation

- The **equipment grounding conductor is connected** directly to the device and not via the connection point X3 (see chapter "Connection of Equipment Grounding Conductor" on page 127).
- Measure the **necessary cross section** of the connection cables according to the determined phase current I_{LN} and the mains fuse.
- **Single-phase mains connection** (outer conductor and neutral conductor):

  Connection to X3 can be made via L1, L2 or L3.

NOTICE **Risk of damage to the device!**

Provide strain relief for the terminal connectors of the device in the control cabinet.

X3, mains connection HCS01.1E-W0003...W0013-x-02, -W0005-x-03, -W0008-x-03

View	Identification	Function	
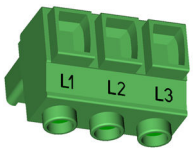	L1	Connection to mains power supply (L1)	
	L2	Connection to mains power supply (L2)	
	L3	Connection to mains power supply (L3)	
Terminal block	**Unit**	**min.**	**max.**
Connection cable Stranded wire	mm^2	0.25	2.5
	AWG	24	14
Stripped length	mm	8	
Tightening torque	Nm	0.5	0.6
Occurring current load and minimum required connection cross section		See technical data of device used (I_{LN} and A_{LN})	
Occurring voltage load		See technical data of device used (U_{LN} or U_{LN_nom})	

Tab. 6-1: Function, pin assignment, properties

X3, mains connection HCS01.1E-W0018-x-02, -W0018-x-03, -W0028-x-03

View	Identification	Function	
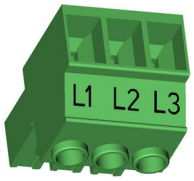	L1	Connection to supply mains (L1)	
	L2	Connection to supply mains (L2)	
	L3	Connection to supply mains (L3)	
Terminal block	**Unit**	**Min.**	**Max.**
Connection cable Stranded wire	mm^2	0,25	6,0
	AWG	24	10
Stripped length	mm	10	
Tightening torque	Nm	0,5	0,8
Occurring current load and minimum required connection cross section		See technical data of device used (I_{LN} and A_{LN})	
Occurring voltage load		See technical data of device used (U_{LN} or U_{LN_nenn})	

Tab. 6-2: Function, Pin Assignment, Properties

X3, mains connection HCS01.1E-W0054-x-03

View	Identification	Function	
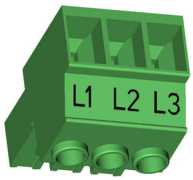	L1	Connection to mains power supply (L1)	
	L2	Connection to mains power supply (L2)	
	L3	Connection to mains power supply (L3)	
Terminal block	**Unit**	**min.**	**max.**
Connection cable Stranded wire	mm^2	0.75	10.0
	AWG	18	8
Stripped length	mm	14	
Tightening torque	Nm	1.5	1.7
Occurring current load and minimum required connection cross section		See technical data of device used (I_{LN} and A_{LN})	
Occurring voltage load		See technical data of device used (U_{LN} or U_{LN_nom})	

Tab. 6-3: Function, pin assignment, properties

X4, motor encoder connection

View	Identification	Function	
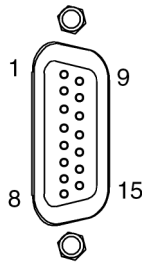 DA000053v01_nn.FH9	X4	Motor encoder connection	
D-Sub, 15-pin, female	**Unit**	**min.**	**max.**
Connection cable Stranded wire	mm^2	0.25	0.5
Type of encoder evaluation		EC	

Tab. 6-4: Function, properties

Technical data chapter 7.1.1 "EC - standard encoder evaluation" on page 181

Supported encoder systems

Encoder systems with a supply voltage of **5 and 12 V**:

- MSM motor encoder
- MS2N motor encoder
- MSK motor encoder
- $1V_{pp}$ sin-cos encoder; HIPERFACE®
- $1V_{pp}$ sin-cos encoder; EnDat 2.1; EnDat 2.2
- $1V_{pp}$ sin-cos encoder; with reference track
- 5V TTL square-wave encoder; with reference track
- SSI
- Combined encoder for SSI (combination of SSI and $1V_{pp}$ sin-cos encoder)
- Resolver (resolvers are **not** supported if optional "Safe Motion" safety technology is also in use)
- Hall sensor box SHL02.1
- Digital Hall sensor in conjunction with Hall sensor adapter box SHL03.1

Pin Assignment

Connection	Signal	Function
1	GND_shld	Connection signal shields (internal shields)
2	A+	Track A analog positive
3	A-	Track A analog negative
4	GND_Encoder	Reference potential power supplies
5	B+	Track B analog positive
6	B-	Track B analog negative
7	EncData+	Data transmission positive
	A+TTL	Track A TTL positive
8	EncData-	Data transmission negative
	A-TTL	Track A TTL negative
9	R+	Reference track positive
10	R-	Reference track negative
11	+12V	Encoder supply 12V
12	+5V	Encoder supply 5V
13	EncCLK+	Clock positive
	B+TTL	Track B TTL positive
14	EncCLK-	Clock negative
	B-TTL	Track B TTL negative
15	Sense-	Return of reference potential (Sense line)
	VCC_Resolver	Resolver supply
Connector housing		Overall shield

Tab. 6-5: Pin Assignment

X5, Motor Connection

Important Notes

⚠ WARNING **Lethal electric shock by live parts with more than 50 V!**

Exclusively operate the device

- with plugged on connectors (even if there haven't been any lines connected to the connectors) and
- with connected equipment grounding conductor!

NOTICE **Risk of damage to the device!**

Provide strain relief for the terminal connectors of the device in the control cabinet.

Notes on Installation

The equipment grounding conductor is connected directly to the device and not via the connection point X5.

The indicated connection cross sections are the cross sections which can be connected. Dimension the **required cross section** of the connection lines according to the occurring current load.

☞

- For optimum shield contact of the motor power cable, use the supplied accessory HAS09.
- For the connection between drive controller and motor, use our ready-made motor power cables, where possible.
- When using NFD03.1 mains filters, the maximum allowed conductor cross section is limited to 4 mm^2.

X5, Motor Connection HCS01.1E-W0003…W0013-x-02, -W0005-x-03, -W0008-x-03

View	Identification	Function	
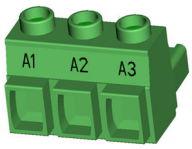	A1	For power connection U1 at motor	
	A2	For power connection V1 at motor	
	A3	For power connection W1 at motor	
Screw connection at connector	**Unit**	**Min.**	**Max.**
Connection cable Stranded wire	mm^2	0,25	2,5
	AWG	24	12
Stripped length	mm	8	
Tightening torque	Nm	0,5	0,6
Occurring current load and minimum required connection cross section	A	See technical data of device used (I_{out})	
Occurring voltage load	V	See technical data of device used (U_{out})	
Short circuit protection		A1, A2, A3 against each other and each of them against ground	
Connection of equipment grounding conductor		Via connection point of equipment grounding conductor ⏚ at device (see index entry "Connection → Equipment grounding conductor")	

Tab. 6-6: Function, Pin Assignment, Properties

X5, Motor Connection HCS01.1E-W0018-x-02, -W0018-x-03, -W0028-x-03

View	Identification	Function	
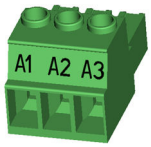	A1	For power connection U1 at motor	
	A2	For power connection V1 at motor	
	A3	For power connection W1 at motor	
Screw connection at connector	**Unit**	**Min.**	**Max.**
Connection cable Stranded wire	mm^2	0,25	6,0
	AWG	24	10
Stripped length	mm	10	
Tightening torque	Nm	0,5	0,8
Occurring current load and minimum required connection cross section	A	See technical data of device used (I_{out})	
Occurring voltage load	V	See technical data of device used (U_{out})	
Short circuit protection		A1, A2, A3 against each other and each of them against ground	
Connection of equipment grounding conductor		Via connection point of equipment grounding conductor ⏚ at device	

Tab. 6-7: Function, Pin Assignment, Properties

X5, Motor Connection HCS01.1E-W0054-x-03

View	Identification	Function	
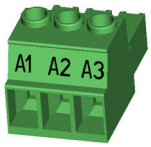	A1	For power connection U1 at motor	
	A2	For power connection V1 at motor	
	A3	For power connection W1 at motor	
Screw connection at connector	**Unit**	**Min.**	**Max.**
Connection cable Stranded wire	mm^2	0,75	10,0
	AWG	18	8
Stripped length	mm	14	
Tightening torque	Nm	1,5	1,7
Occurring current load and minimum required connection cross section	A	See technical data of device used (I_{out})	
Occurring voltage load	V	See technical data of device used (U_{out})	
Short circuit protection		A1, A2, A3 against each other and each of them against ground	
Connection of equipment grounding conductor		Via connection point of equipment grounding conductor ⏚ at device	

Tab. 6-8: Function, Pin Assignment, Properties

X6, Motor Temperature Monitoring and Motor Holding Brake

⚠ WARNING **Dangerous movements! Danger to persons from falling or dropping axes!**

The standard motor holding brake provided or an external motor holding brake controlled directly by the drive controller are not sufficient on their own to guarantee personal safety!

Personal safety must be achieved using higher-level, fail-safe measures:

- Block off danger zones with safety fences or safety guards
- Additionally secure vertical axes against falling or dropping after switching off the motor power by, for example,
  - mechanically securing the vertical axes
  - adding external braking/arrester/clamping mechanisms
  - ensuring sufficient equilibration of the vertical axes

⚠ WARNING **Lethal electric shock by live parts with more than 50 V!**

The input of the motor temperature evaluation is **not** galvanically isolated from the housing. If the voltage applied to the input is impermissibly high (e.g. because of a flashover of the motor winding voltage), this voltage may come into contact with the housing. Ensure that the temperature sensor of the connected motor has a **double** isolation against the motor winding.

NOTICE **Excessive voltage at the input of the motor temperature evaluation may cause damage to the device!**

The voltage allowed at the input of the motor temperature evaluation must correspond to the allowed control voltage of the device. If the voltage applied to the input is impermissibly high, the device may be damaged.

Function

Connection point X6 contains the connections for

- monitoring the motor temperature
- controlling the motor holding brake

☞ Via an integrated contact element (BR), the power section switches the voltage of the **external** 24-V supply to the output for controlling the motor holding brake.

View	Connection	Signal name	Function
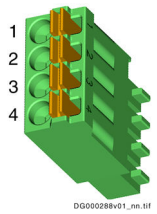	1	MotTemp+	Motor temperature evaluation input
	2	MotTemp-	
	3	+24VBr	Output for controlling the motor holding brake
	4	0VBr	

Spring terminal (connector)	Unit	Min.	Max.
Connection cable Stranded wire	mm^2	0,25	1,5
	AWG	24	16
Stripped length	mm	10	
Current carrying capacity of outputs X6	A	-	1,25
Time constant of load	ms	-	50
Number of switching operations at maximum time constant of load		Wear-free electronic contact	
Switching frequency	Hz	-	0,5
Short circuit protection		X6.3 against X6.4 (output for controlling the motor holding brake)	
Overload protection		X6.3 against X6.4 (output for controlling the motor holding brake)	

Tab. 6-9: Function, pin assignment

Motor holding brake: selection

Maximum current carrying capacity of outputs X6: 1.25 A

⇒ $R_{br\ (min)} = U_{br\ (max)} / 1.25\ A$

$R_{br\ (min)}$: Minimum allowed resistance of the motor holding brake

$U_{br\ (max)}$: Maximum supply voltage of the motor holding brake

If $U_{br\ (max)}$ = 24 V +5% = 25.2 V, this results in:

$R_{br\ (min)}$ = 20.16 Ω (applicable to all operating and ambient conditions)

Motor holding brake: installation instructions

Make sure the **power supply** for the motor holding brake at the motor is sufficient. You have to take into account that voltage drops on the supply line. Use connection lines with the highest possible cross section of the single strands.

Use an **external contact element in accordance with the required safety category**, if you wish to supply motor holding brakes with higher currents than the allowed current load at X6. Make sure to comply with the required minimum current consumption of 100 mA when using the external contact element. Otherwise, the brake current monitoring unit signals an error.

Mounting and installation

Connection diagram

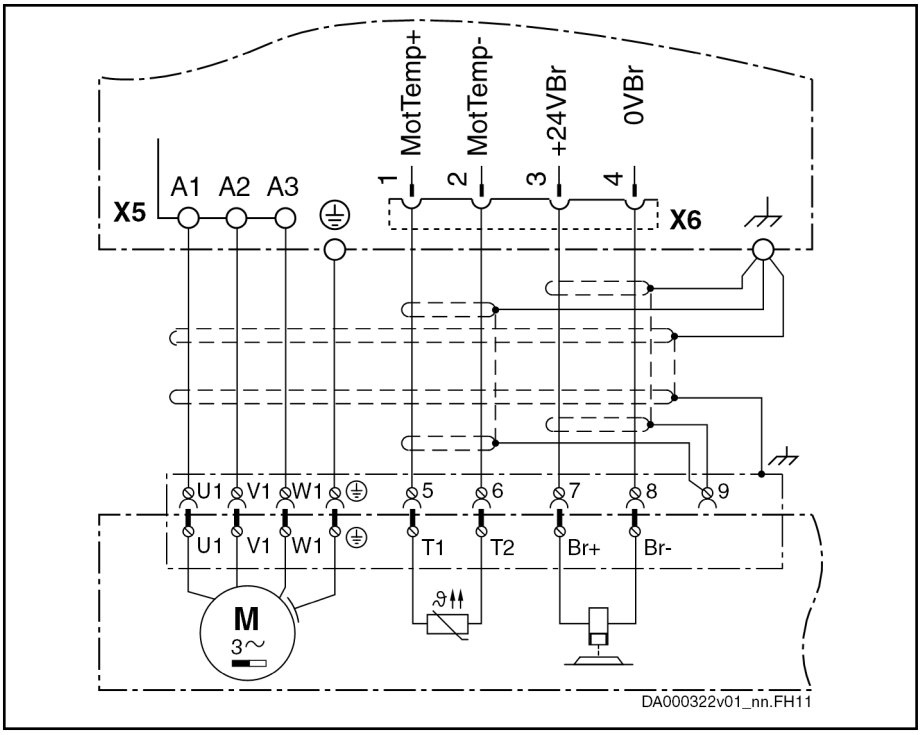

Fig. 6-6: Connection of motor temperature monitoring and motor holding brake

X9, integrated/external braking resistor

⚠ WARNING **Lethal electric shock by live parts with more than 50 V!**

Exclusively operate the device

- with plugged on connectors (even if there haven't been any lines connected to the connectors) and
- with connected equipment grounding conductor!

Function

X9 is used to connect the integrated or external braking resistor **HLR**. By means of an internal switch, the braking resistor is connected to the DC bus.

☞ **Parameterize** the **external braking resistor** by means of the firmware to protect the drive controller and the braking resistor against overload:

- P-0-0860, Converter configuration
- P-0-0858, Data of external braking resistor

Connection (HCS01.1E-W0003… W0028)

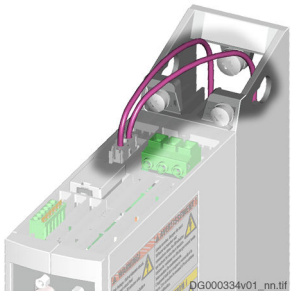

Fig. 6-7: Connecting the braking resistor (HCS01.1E-W0003…W0028)

Connection (HCS01.1E-W0054)

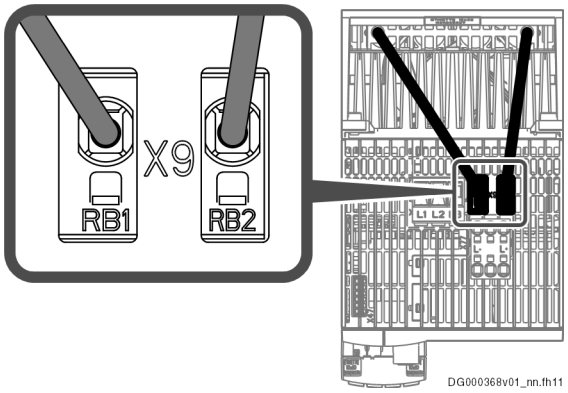

Fig. 6-8: Connecting the braking resistor (HCS01.1E-W0054)

Notes on installation

Maximum allowed line length to external braking resistor: **5 m**

Twist unshielded lines.

The accessory HAS05.1-015-NNN-NN (snap-on ferrite) ensures that Class C3 of the EMC Directive EN 61800-3 is complied with for braking resistors installed outside of the control cabinet.

The snap-on ferrite is designed for the following components:

- HCS01.1E-W00**18** + HLR01.2N-01K0-N**68**R0-E-007
- HCS01.1E-W00**28** + HLR01.2N-01K0-N**68**R0-E-007
- HCS01.1E-W00**54** + HLR01.2N-01K0-N**28**R0-E-007

⚠ WARNING **Lethal electric shock from live parts with more than 50 V!**

Risk of burns by hot housing surfaces! Risk of fire!

The temperature of the housing surface of an external HLR braking resistor can rise up to 150 °C. Run the connection lines with a sufficient distance (> 200 mm) to the housing of the HLR braking resistor to avoid damaging the insulation of the connection lines. Outside of the control cabinet, run the connection lines of an HLR braking resistor in a metal pipe with a wall thickness of at least 1 mm.

Do not touch hot housing surfaces! Mount the HLR braking resistor on a temperature-resistant mounting surface. Provide a sufficient distance between the HLR braking resistor and heat-sensitive materials. Make sure the cooling air supply is unrestricted. Take care that the environment can discharge the dissipation heat.

NOTICE **Danger by insufficient installation!**

Protect the lines with the appropriate fusing elements in the supply feeder.

For the connection lines at X9, use at least the cross section of the lines for mains connection at X3. If this is impossible, select the cross section of the connection line at X9 in accordance with the continuous power of the braking resistor.

X13, 24V Supply (Control Voltage)

Function, Pin Assignment

The external 24V supply is applied via connection point X13 for

- the control section and power section of the drive controller
- brake control via X6
- the digital inputs and the digital output to X31 / X32

View	Connection	Signal name	Function
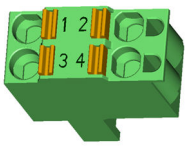	1	0V	Reference potential for power supply
	2	0V	
	3	+24V	Power supply
	4	+24V	
Spring terminal (connector)	**Unit**	**Min.**	**Max.**
Connection cable Stranded wire	mm^2	1,0	2,5
	AWG	16	12
Stripped length	mm	10	
Power consumption	W	P_{N3} (see data for control voltage)	
Voltage load capacity	V	U_{N3} (see data for control voltage)	
Current carrying capacity "looping through" from 0V to 0V, 24V to 24V	A	10	
Polarity reversal protection		Within the allowed voltage range by internal protective diode	
Insulation monitoring		Possible	

Tab. 6-10: Function, Pin Assignment, Properties

Notes on Installation

Requirements on the connection to the 24V supply:

- Minimum cross section: 1 mm^2
- Maximum allowed inductance: 100 µH (2 twisted single strands, 75 m long)
- Parallel line routing where possible

Depending on the power consumption of the devices and the current carrying capacity of the connector X13, check via how many devices one line for 24V supply can be looped through. You might possibly have to connect another device directly to the 24V supply and then loop through the control voltage from this device to other devices.

X24 P2, X25 P1, communication

Control section type	Function
ECONOMY	sercos III, EtherCAT (S3) Communication module for sercos III and EtherCAT field bus systems
BASIC	Multi-Ethernet (ET) With the Multi-Ethernet communication module "ET", drive controllers can be integrated in different Ethernet field bus systems (e.g. sercos III, EtherCAT, EtherNet/IP or PROFINET IO).
ADVANCED	• sercos III master (CC) Is used as "master" for cross communication (CC = Cross Communication) • Multi-Ethernet (ET) With the Multi-Ethernet communication module "ET", drive controllers can be integrated in different Ethernet field bus systems (e.g. sercos III, EtherCAT, EtherNet/IP or PROFINET IO).

Tab. 6-11: X24 P2, X25 P1, communication

Description

The connection point complies with IEEE 802.3 standard.

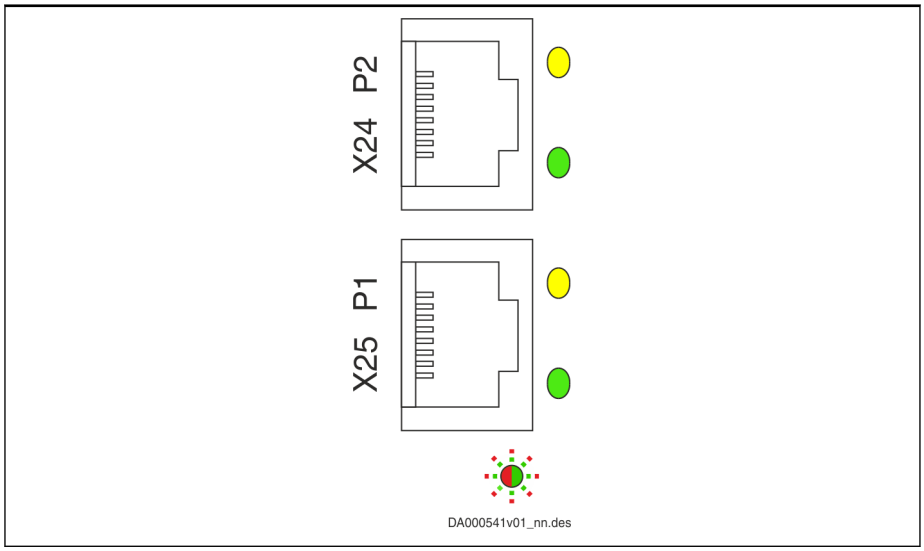

Tab. 6-12: Connection point

P1, P2 P1 means "Port 1" and P2 means "Port 2". Thereby, the error counter of the firmware can be directly assigned to a Port.

Connection *sercos III, EtherNet/IP, PROFINET:*

- Input: arbitrary
- Output: arbitrary

EtherCAT:

- Input: X25 P1
- Output: X24 P2

View	Connection	Signal name	Function
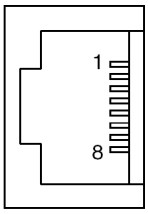 DA000041v01_nn.FH	1	TD+	Transmit, differential output A
	2	TD-	Transmit, differential output B
	3	RD+	Receive, differential input A
	4	n. c.	-
	5	n. c.	-
	6	RD-	Receive, differential input B
	7	n. c.	-
	8	n. c.	-
	Housing		Shield connection
Properties			
Standard	• Ethernet • Type: RJ-45, 8-pin		
Compatibility	100Base-TX according to IEEE 802.3u		
Recommended cable type	• According to **CAT5e**; type of shield ITP (Industrial Twisted Pair) • Ready-made cables which can be ordered: – **RKB0011** Long cables (100 m at maximum) to connect the drive system to the higher-level control unit or remote communication nodes. Minimum bending radius: – 48.75 mm if laid flexibly – 32.50 mm if laid permanently Order code for a 30 m long cable: RKB0011/030,0 – **RKB0013** Short cables to connect devices arranged side by side in the control cabinet. 4 lengths available: 0.19 m; 0.25 m; 0.35 m; 0.55 m Order code for a 0.55 m long cable: RKB0013/00,55 Minimum bending radius: 30.75 mm		

Tab. 6-13: Function, Pin Assignment, Properties

LEDs chapter 7.1.3 "ET - Multi-Ethernet" on page 207

X26, Engineering interface

Description Exclusively at ADVANCED devices and devices with EP option.

View	Connection	Signal name	Function
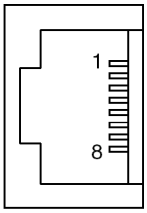 DA000041v01_nn.FH	1	TD+	Transmit, differential output A
	2	TD-	Transmit, differential output B
	3	RD+	Receive, differential input A
	4	n. c.	-
	5	n. c.	-
	6	RD-	Receive, differential input B
	7	n. c.	-
	8	n. c.	-
	Housing		Shield connection
Properties			
Standard	• Ethernet • Type: RJ-45, 8-pin		
Compatibility	100Base-TX according to IEEE 802.3u		
Recommended cable type	• According to **CAT5e**; type of shield ITP (Industrial Twisted Pair) • Ready-made cables which can be ordered: – **RKB0011** Long cables (100 m at maximum) to connect the drive system to the higher-level control unit or remote communication nodes. Minimum bending radius: – 48.75 mm if laid flexibly – 32.50 mm if laid permanently Order code for a 30 m long cable: RKB0011/030,0 – **RKB0013** Short cables to connect devices arranged side by side in the control cabinet. 4 lengths available: 0.19 m; 0.25 m; 0.35 m; 0.55 m Order code for a 0.55 m long cable: RKB0013/00,55 Minimum bending radius: 30.75 mm		

Tab. 6-14: Function, Pin Assignment, Properties

LEDs chapter 7.1.3 "ET - Multi-Ethernet" on page 207

X31, Digital Inputs, Digital Output

View	Connection	Signal name	Function	Default assignment
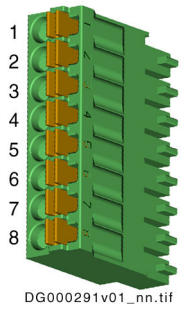	1	I_1	Digital input	Probe 1 [1]
	2	I_2		Probe 2 [1]
	3	I_3		E-Stop input [2]
	4	I_4		Travel range limit switch input [2]
	5	I_5		Travel range limit switch input [2]
	6	I_6		Not assigned [2]
	7	I_7		Not assigned [2]
	8	I/O_8	Digital input/output	Not assigned

Spring terminal (connector)	Unit	Min.	Max.
Connection cable Stranded wire	mm^2	0,2	1,5
	AWG	24	16
Stripped length	mm	-	10
Input current	A	-	0,01
Input voltage	V	-	24
Output current I/O_8	A	-	0,5

1) Digital Inputs Type B (Probe)
2) Digital Inputs Type A (Standard)

Tab. 6-15: Function, Pin Assignment, Properties

☞ The **reference potential** for the digital inputs and the digital input/output is applied to **X13.1** and **X13.2**.

Technical Data

- chapter "Digital Inputs Type A (Standard)" on page 218
- chapter "Digital inputs type B (probe)" on page 219
- chapter "Digital Outputs (Standard)" on page 222

X32, analog input

View	Connection	Signal name	Function
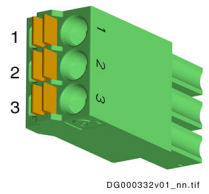	1	GND_100	Connection for inner cable shield
	2	I_a_1-	Analog input
	3	I_a_1+	
Spring terminal (connector)	**Unit**	**min.**	**max.**
Connection cable Stranded wire	mm^2	0.2	1.5
	AWG	24	16
Stripped length	mm	-	10
Shielding	-	-	Only use shielded cables for cable lengths > 30 m.

Tab. 6-16: Function, pin assignment, properties

Shield connection chapter "Analog inputs/outputs: Shield connection" on page 157

Technical data chapter 7.1.8 "Analog Voltage Input" on page 226

X47, Bb relay contact, module bus

HCS01.1E-xxxxx-x-02			
View	**Connection**	**Signal name**	**Function**
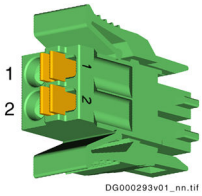	1	Rel1	Bb relay contact [1]
	2	Rel2	Bb relay contact [1]
Spring terminal (connector)	**Unit**	**min.**	**max.**
Connection cable Stranded wire	mm^2	0.2	1.5
	AWG	24	16
Stripped length	mm	10	
Contact rating	V		30
	A	0.01	1

1) Wire the Bb relay contact in the control circuit for mains connection (see chapter "Control Circuit for the Mains Connection" on page 104). When the contact opens, the mains contactor must interrupt the power supply.

Tab. 6-17: Function, pin assignment, properties

Technical data chapter "Relay Contact Type 2" on page 229

Mounting and installation

HCS01.1E-xxxxx-x-03			
View	**Connection**	**Signal name**	**Function**
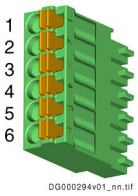	1	Rel1	Bb relay contact [1]
	2	Rel2	Bb relay contact [1]
	3	Mod1	Module bus [2]
	4	Mod2	Module bus [2]
	5	0V_Mod	Module bus GND [2]
	6	0V_Mod	Module bus GND [2]
Spring terminal (connector)	**Unit**	**min.**	**max.**
Connection cable	mm^2	0.2	1.5
Stranded wire	AWG	24	16
Stripped length	mm	10	
Contact rating	V		30
	A	0.01	1

1) Wire the Bb relay contact in the control circuit for mains connection (see chapter "Control Circuit for the Mains Connection" on page 104). When the contact opens, the mains contactor must interrupt the power supply. If multiple devices supply the DC bus (group supply), connect the Bb relay contacts (X47) of all supplying devices in series.

2) The pins 3, 4 and 5, 6 are jumpered. This allows the module bus to be looped through from one device to the next.

Tab. 6-18: Function, pin assignment, properties

Module bus connections

Maximum allowed length of an individual module bus connection: **10 m**

In the following cases, use **shielded cables** for the module bus connection:

- The length **of an individual** module bus connection is **> 0.5 m**.
- The total length **of all** module bus connections of the drive system is **> 3 m**.

Use shielded **cables** with a conductor gauge **≥ 2 × 0.5 mm^2**.

Accessory for shield connection: HAS09.1-001-NNN-NN (see chapter " Module bus cable shield connection" on page 256).

Technical data

chapter "Relay Contact Type 2" on page 229

X77, L+ L-, DC Bus Connection

⚠ WARNING **Lethal electric shock by live parts with more than 50 V!**

Before working on live parts: De-energize installation and secure power switch against unintentional or unauthorized re-energization.

Before accessing the device, wait at least **30 minutes** after switching off the supply voltages **to allow discharging**.

Check whether voltage has fallen below 50 V before touching live parts!

Never operate the drive controller without touch guard or without DC bus connector. Only remove the touch guard, if you want to use the DC bus connector at the drive controller. If you do not use the DC bus connector any longer, you have to cover the DC bus connection with the supplied touch guard.

☞ Observe the information on DC bus coupling (see chapter 4.6.4 "DC bus coupling" on page 105).

Function, Pin Assignment

The DC bus connection connects

- several HCS01.1E-W00xx-x-**03** to each other
- one drive controller to a DC bus capacitor unit (to backup the DC bus voltage)

Touch Guard

The DC bus connection has been provided with a touch guard at the factory. To plug the DC bus connector, you have to remove the touch guard.

Mounting and installation

How to Remove the Touch Guard:

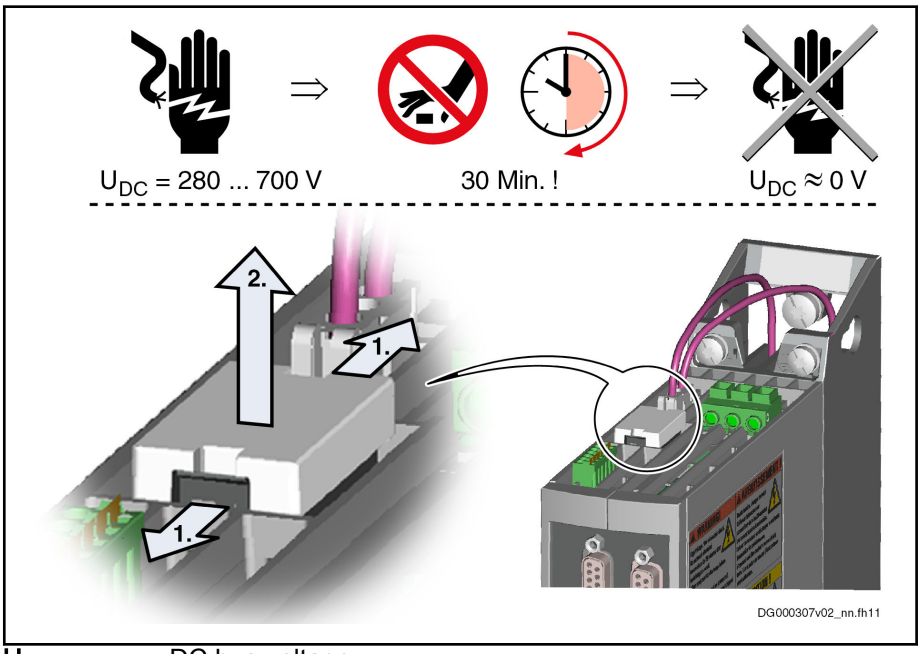

U_{DC}	DC bus voltage
30 Min. !	Before accessing the device, wait at least 30 minutes after switching off the supply voltages to allow discharging.
1.	With a small screwdriver (blade width < 3 mm), push the fixing device outwards and simultaneously lever out the touch guard.
2.	Pull off touch guard.
3.	Store the touch guard in a place where you can find it later on. If you want to operate the device without DC bus connector, you have to plug the touch guard on connection point X77 again.

Fig. 6-9: How to Remove the Touch Guard

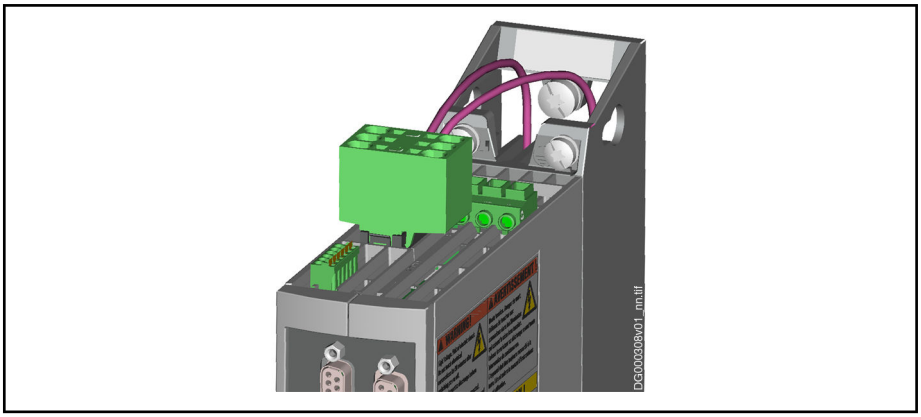

Fig. 6-10: DC bus connector at device

View	Identification	Function
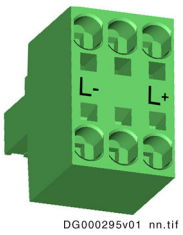	L-	Connection points for connecting DC bus connections of several devices (The DC bus connector is available as an accessory; see chapter 8.2.2 "DC Bus Connector (RLS0778/K06)" on page 258)
	L-	
	n. c.	
	n. c.	
	L+	
	L+	
	Unit	
Maximum connection cross section (stranded wire)	mm^2	6
	AWG	8
Stripped length	mm	15
Short circuit protection		Via fusing elements connected in the incoming circuit to the mains connection
Overload protection		Via fusing elements connected in the incoming circuit to the mains connection
Maximum **current carrying capacity "looping through"** from L+ to L+, L- to L-	A	31

Tab. 6-19: Function, Pin Assignment, Properties

Notes on Installation

To wire the DC bus, use the shortest possible flexible, **twisted** wires.

When the DC buses of several devices have been coupled, the lines **mustn't be run outside of the control cabinet**.

NOTICE **Risk of damage by reversing the polarity of the DC bus connections L- and L+**

Make sure the polarity is correct.

Length of twisted wire	Max. 2 m
Line cross section	Min. 6 mm^2, but not smaller than cross section of supply feeder
Line protection	By means of fuses in the mains connection
Dielectric strength of single strand against ground	≥ 750 V (e.g.: strand type - H07)

Tab. 6-20: DC Bus Line

Mounting and installation

Options for interconnecting the DC buses of several devices:

Direct connection	Indirect connection via connecting bars
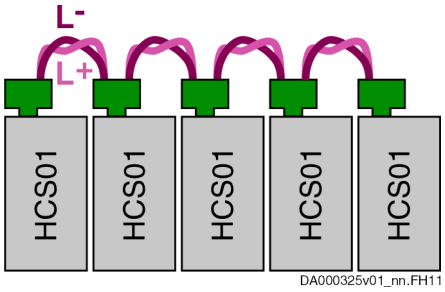	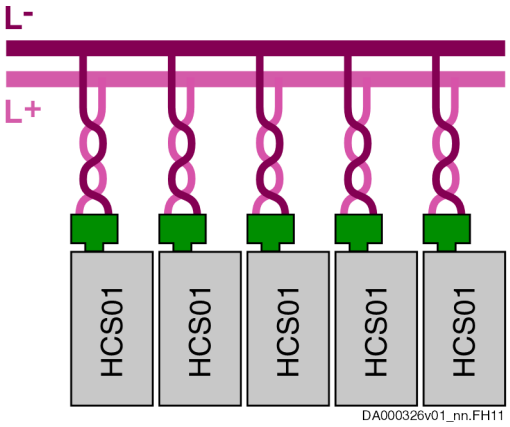

Tab. 6-21: DC Bus Connection

Shield connection

Shield connection plates

Special plates are used for shield connection of cables that are connected to the device. The plates are part of the HAS09 accessories and are screwed to the device.

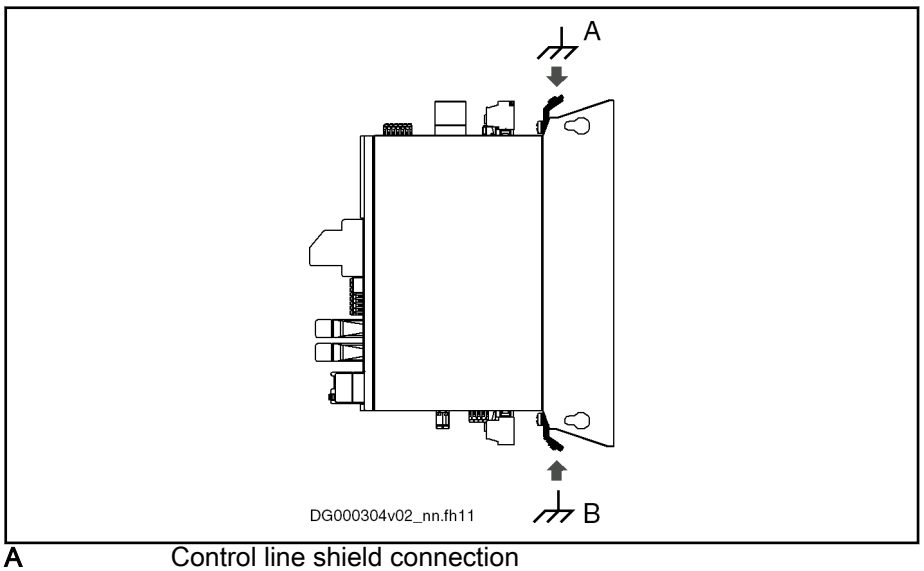

A Control line shield connection
B Motor cable shield connection

Fig. 6-11: Shield connection

☞ The shield connection should not be used for strain relief of the cables. Mount a separate strain relief near the drive controller.

Motor cable shield connection

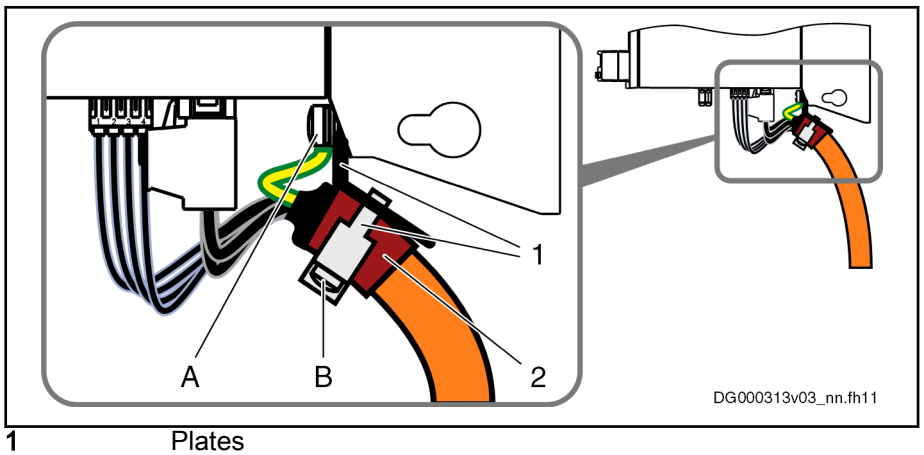

1 Plates
2 Shield of motor cable
A Screw (M5×12 or M5×16); tightening torque: 5 Nm
B Screw (M5×30); tightening torque: 1 Nm

Fig. 6-12: Motor cable shield connection

Mounting and installation

Control line shield connection

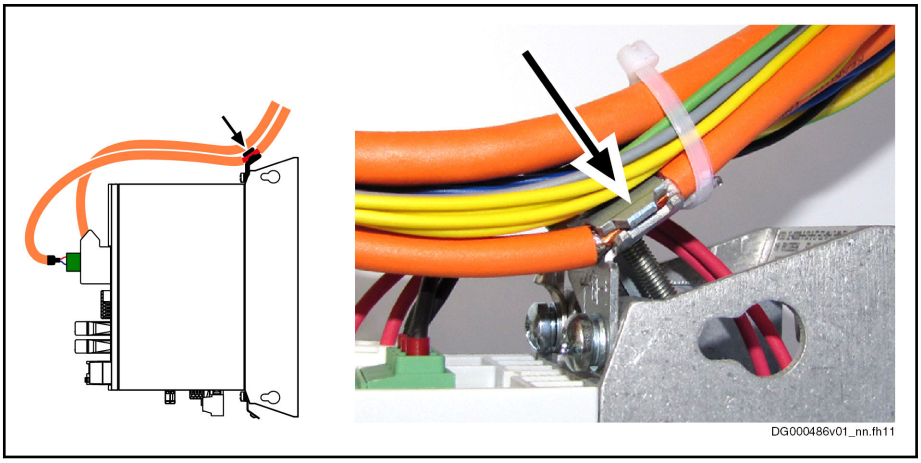

Fig. 6-13: Shield Connection of Shielded Lines at the Top of the Device

Analog inputs/outputs: Shield connection

Analog input

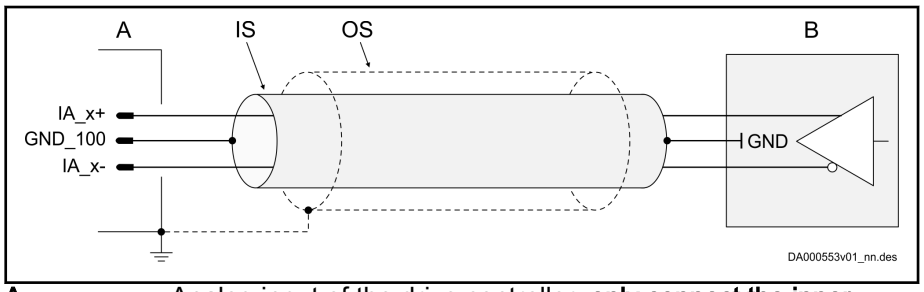

A	Analog input of the drive controller; **only connect the inner shield of the connection cable to the drive controller if GND has not been connected to ground in the external device.**
B	External device
IS	Inner shield of the connection cable
OS	Overall shield of the connection cable

Fig. 6-14: Shield connection for analog inputs

Analog output

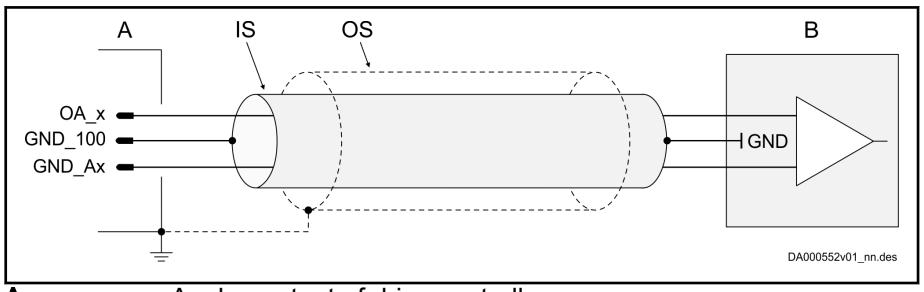

A	Analog output of drive controller
B	External device; **only connect the inner shield of the connection cable to the external device if GND has not been connected to ground in the external device.**
IS	Inner shield of the connection cable
OS	Overall shield of the connection cable

Fig. 6-15: Shield connection for analog outputs

Ground connection

The ground connection of the housing is used to provide functional safety of the drive controllers and protection against contact in conjunction with the equipment grounding conductor.

Ground the housings of the drive controllers:

1. Connect the bare metal back panel of the drive controller in conductive form to the mounting surface in the control cabinet. To do this, use the supplied mounting screws.
2. Connect the mounting surface of the control cabinet in conductive form to the equipment grounding system.
3. For the ground connection, observe the maximum allowed ground resistance.

6.2.4 Optional connection points

X8, Optional Encoder (Option EC)

You can connect an optional encoder to connection point X8.

Technical data: See description of connection point X4.

X8, Encoder Emulation (Option EM)

Description

Emulation of absolute value and incremental encoder signals for further evaluation by a control unit. The signals are galvanically isolated from the circuit board.

View	Identification	Function	
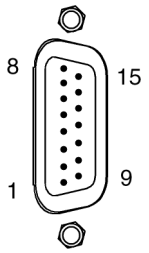 DA000056v01_nn.FH9	X8	Encoder emulation	
D-Sub 15-pin, male	**Unit**	**Min.**	**Max.**
Connection cable Stranded wire	mm^2	0,25	0,5

Tab. 6-22: Function, Pin Assignment, Properties

Emulated Encoder Systems

- Incremental encoder
- SSI encoder
- Incremental encoder with signal level converter

Pin Assignment

Connection	Signal	Level	Input/ Output	Function	Incremental encoder	SSI encoder	Incremental encoder with signal level converter
1	n. c.	-	-	Not assigned			
2	UL	5 … 30 V	In	Power supply for output driver			✓
3	SSI_CLK+	RS422	In	SSI clock positive		✓	
4	SSI_CLK-	RS422	In	SSI clock negative		✓	
5	n. c.	-	-	Not assigned			
6	ULA0	UL	Out	Reference track with UL level			✓
7	ULA1	UL	Out	Track A1 with UL level			✓

Connection	Signal	Level	Input/ Output	Function	Incremental encoder	SSI encoder	Incremental encoder with signal level converter
8	ULA2	UL	Out	Track A2 with UL level			✓
9	ULA0+	RS422	Out	Reference track positive	✓		
	SSI_Data+	RS422	Out	SSI data positive		✓	
10	0 V	0 V	-	Reference potential / inner shield	✓	✓	✓
11	ULA0-	RS422	Out	Reference track negative	✓		
	SSI_Data-	RS422	Out	SSI data negative		✓	
12	UA1+	RS422	Out	Track A1 positive	✓		
13	UA1-	RS422	Out	Track A1 negative	✓		
14	UA2+	RS422	Out	Track A2 positive	✓		
15	UA2-	RS422	Out	Track A2 negative	✓		
Connector housing	-	-	-	Overall shield			

Tab. 6-23: Pin Assignment

X22 P2, X23 P1, Multi-Ethernet (ET option)

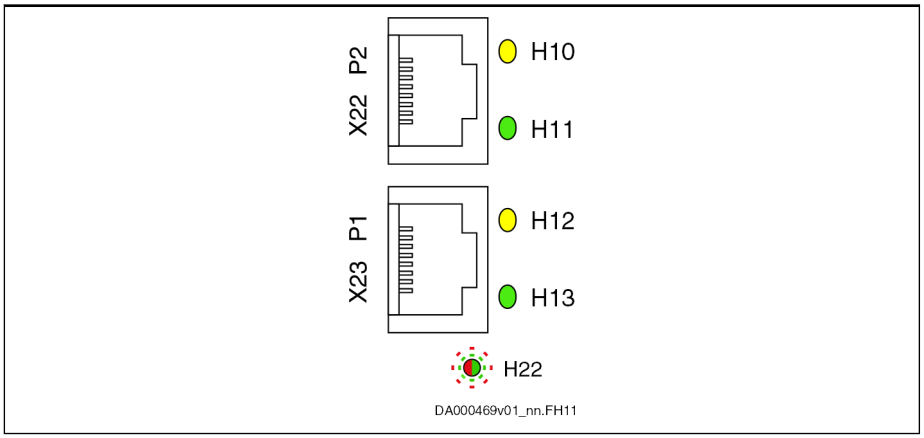

Tab. 6-24: Connection point

Technical data chapter "X24 P2, X25 P1, communication" on page 144

X26, Engineering interface

See chapter "X26, Engineering interface" on page 146.

Mounting and installation

X30, PROFIBUS PB

Description

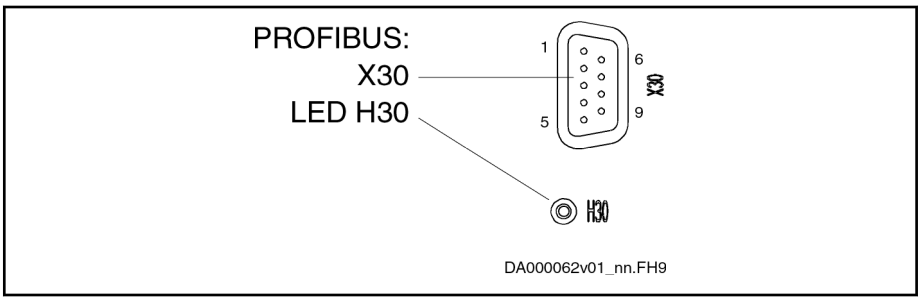

Fig. 6-16: PROFIBUS Interface

View	Identification	Function	
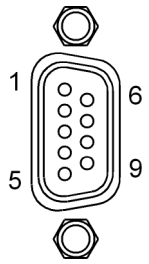	X30	PROFIBUS PB	
D-Sub, 9-pin, female	**Unit**	**Min.**	**Max.**
Connection cable Stranded wire	mm^2	0,08	0,5

Tab. 6-25: Function, Pin Assignment, Properties

Pin Assignment

Pin	DIR	Signal	Function
1		-	n. c.
2		-	n. c.
3	I/O	RS485+	Receive/transmit data-positive
4	O	CNTR-P	Repeater control signal
5		0 V	0 V
6	O	+5 V	Repeater supply
7		-	n. c.
8	I/O	RS485-	Receive/transmit data-negative
9		0V	0 V

Tab. 6-26: Signal Assignment

Shield Connection Via D-sub mounting screws and metallized connector housing.

Compatibility of the Interface According to DIN EN 50 170

Recommended Cable Type According to DIN EN 50 170 - 2, cable type A

Bus Connectors The PROFIBUS connectors each have a connectable terminating resistor. The terminating resistor must always be active at both the first and last bus node. Carry out the connection as shown in the figures below.

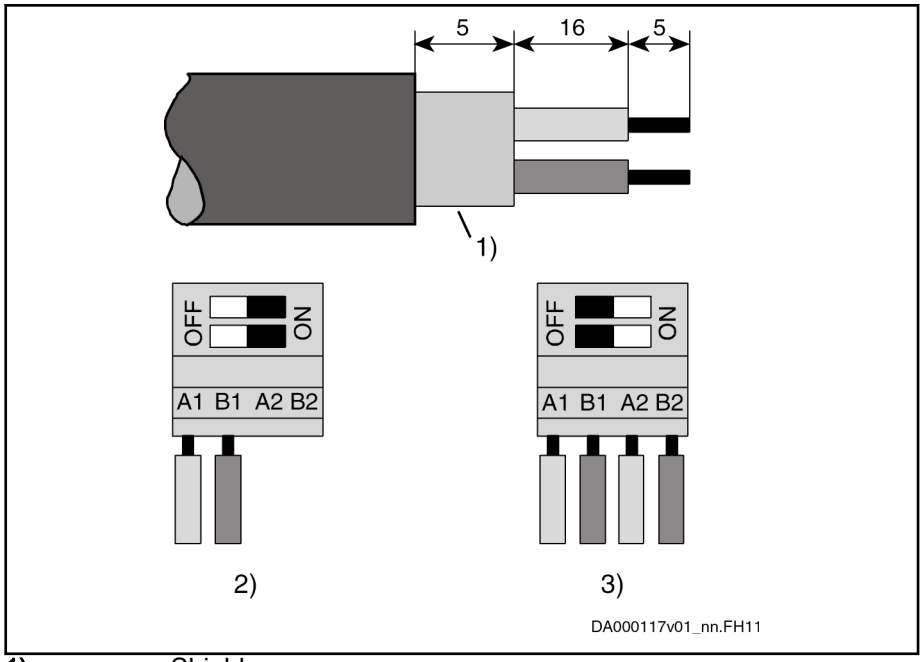

1) Shield
2) Bus connection and switch position for first node and last node
3) Bus connection and switch position for all other nodes

Fig. 6-17: Preparing a Cable for Connecting a Bus Connector

To assemble the bus cable, proceed as follows:

- Use cable according to DIN EN50170 / 2 edition 1996
- Strip cable (see figure above)
- Insert both cores into screw terminal block

Do not interchange the cores for A and B.

- Press cable sheath between both clamps
- Screw on both cores in screw terminals

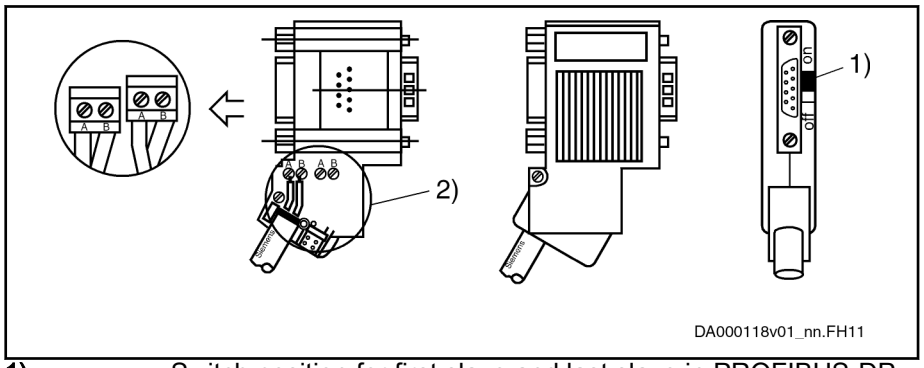

1) Switch position for first slave and last slave in PROFIBUS-DP
2) Cable shield must have direct contact to metal

Fig. 6-18: Bus Connection for First and Last Slave, Bus Connector With 9-pin D-Sub Female Connector, INS0541

Mounting and installation

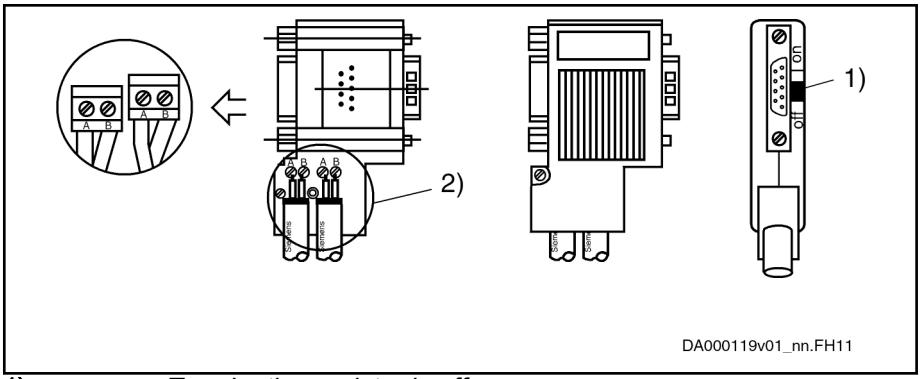

1) Terminating resistor is off
2) Cable shield must have direct contact to metal

Fig. 6-19: Bus Connection for all Other Slaves, Bus Connector With 9-pin D-Sub Female Connector, INS0541

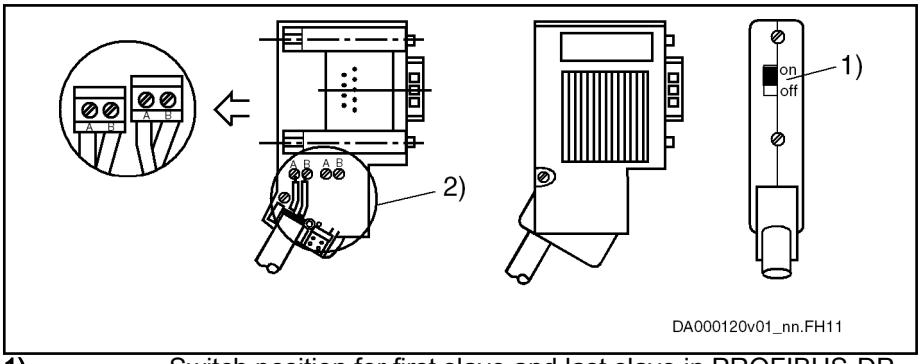

1) Switch position for first slave and last slave in PROFIBUS-DP
2) Cable shield must have direct contact to metal

Fig. 6-20: Bus Connection for First and Last Slave, Without 9-pin D-Sub Female Connector, INS0540

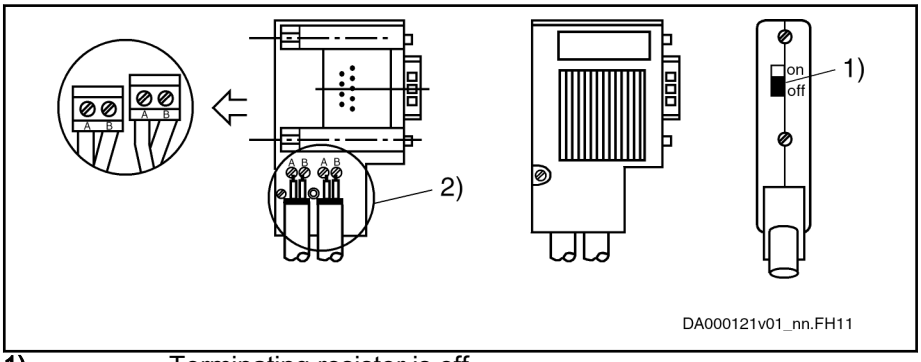

1) Terminating resistor is off
2) Cable shield must have direct contact to metal

Fig. 6-21: Bus Connection for all Other Slaves, Without 9-pin D-Sub Female Connector, INS0540

Connect the drive controller to a control unit using a shielded two-wire line in accordance with DIN 19245/Part 1.

Signal Specification chapter 7.1.4 "PB - PROFIBUS" on page 214

X37, Digital Inputs/Outputs (DA Option)

View	Connection	Signal name	Function	Connection	Signal name	Function
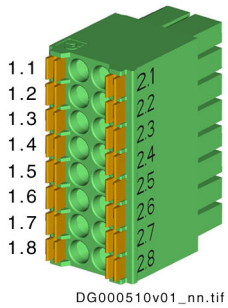	1.1	I_3	Digital input	2.1	IO_1	Digital input/output
	1.2	I_4		2.2	IO_2	
	1.3	I_5		2.3	O_3	Digital output
	1.4	I_6		2.4	O_4	
	1.5	I_7		2.5	O_5	
	1.6	I_8		2.6	O_6	
	1.7	24V_Ext	Power supply (U_{ext})	2.7	O_7	
	1.8	0V_Ext		2.8	O_8	

Spring terminal (connector)	Unit	Min.	Max.
Connection cable Stranded wire	mm^2	0,2	1,5
	AWG	24	16
Stripped length	mm	-	10

Tab. 6-27: Function, Pin Assignment, Properties

Technical Data

- chapter "Digital Inputs Type A (Standard)" on page 218
- chapter "Digital Outputs (Standard)" on page 222

X38, analog inputs/outputs (DA option)

View	Connection	Signal name	Function	Connection	Signal name	Function
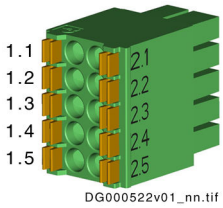	1.1	GND_AnaEA	GND reference	2.1	IA_2+	Analog input
	1.2	OA_1	Analog output	2.2	IA_2-	
	1.3	GND_100_AnaOut	GND reference of analog output	2.3	GND_100_AnaIn	GND reference of analog input
	1.4	OA_2	Analog output	2.4	IA_1+	Analog input
	1.5	GND_AnaEA	GND reference	2.5	IA_1-	

Spring terminal (connector)	Unit	min.	max.
Connection cable Stranded wire	mm^2	0.2	1.5
	AWG	24	16
Stripped length	mm	-	10

Tab. 6-28: Function, pin assignment, properties

Shield connection chapter "Analog inputs/outputs: Shield connection" on page 157

Technical data

- chapter 7.1.8 "Analog Voltage Input" on page 226
- chapter 7.1.9 "Analog current input" on page 227
- chapter 7.1.10 "Analog Output" on page 228

X41, Safe Motion safety technology

View	Connec-tion	Signal name	Function
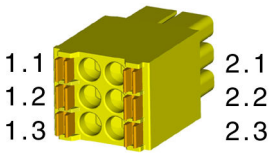	1.1	SI_Out_Ch2	Safe output channel 2
	1.2	0V	Power supply of inputs/outputs (U_{ext})
	1.3	SI_Out_Ch1	Safe output channel 1
	2.1	SI_In_Ch2	Input 2
	2.2	24V	Power supply of inputs/outputs (U_{ext})
	2.3	SI_In_Ch1	Input 1
Spring terminal (connector)	**Unit**	**Min.**	**Max.**
Connection cable Stranded wire	mm^2	1	1.5
	AWG	16	16
Stripped length	mm	-	10
Polarity reversal protection for power supply	-	Available	
Overvoltage protection	-	Available	

Tab. 6-29: X41, Safe Motion safety technology

Technical data chapter "Digital inputs (safety technology S options)" on page 221
chapter "Digital outputs (safety technology S options)" on page 224

X42, X43, Safe Motion safety technology (communication)

View	Identification	Function
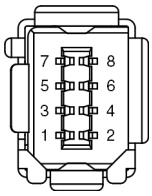 X42: 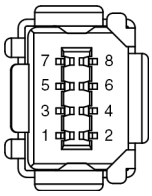 X43:	X42 X43	Connection points for connecting the HSZ01 [1] safety zone module and the safety zone nodes: X42: Input X43: Output
Connection cable	• Maximum total length of **all** cables of a safety zone: **2500 m** • Maximum length of **one** cable between two connection points: **100 m** • Number of safety zone nodes (without HSZ01): – Maximum: 35 – Minimum: 1 • Ready-made cables that can be ordered: – **RKB0051** Short cables to connect devices arranged side by side in the control cabinet. Available lengths: 0.19 m; 0.25 m; 0.35 m; 0.55 m Minimum bending radius: 4xD (= 4x6 mm = 24 mm) Order code for a 0.55 m long cable: RKB0051/00,55 – **RKB0052** Long cables to connect remote communication nodes, also outside of the control cabinet. Available lengths: 1 m; 2 m; 5 m Minimum bending radius: 8xD (= 8x6 mm = 48 mm) Order code for a 5 m long cable: RKB0052/005,0 Flexible installation of the cable is not allowed.	

1) See Project Planning Manual "IndraDrive Additional Components and Accessories" (R911306140).

Tab. 6-30: X42, X43

X49, optional safety technology L3 or L4

View	Connec-tion	Signal name	Function
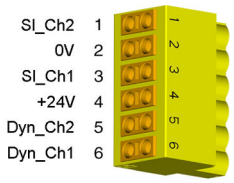	1	SI_Ch2	Input for selection of channel 2
	2	0V	GND reference of inputs and outputs
	3	SI_Ch1	Input for selection of channel 1
	4	+24V	Dynamization outputs power supply
	5	Dyn_Ch2	Channel 2 dynamization output
	6	Dyn_Ch1	Channel 1 dynamization output
Spring terminal (connector)	**Unit**	**min.**	**max.**
Connection cable Stranded wire	mm^2	1	1.5
	AWG	16	16
Stripped length	mm	-	8

Tab. 6-31: X49, optional safety technology Safe Torque Off

Technical data

- chapter "Digital inputs (safety technology L options)" on page 220
- chapter "Digital Outputs (Safety Technology L Options)" on page 223

☞ When the dynamization outputs do not work, check the power supply connection. The polarity might possibly have been reversed.

X61, CANopen (CN Option)

Description

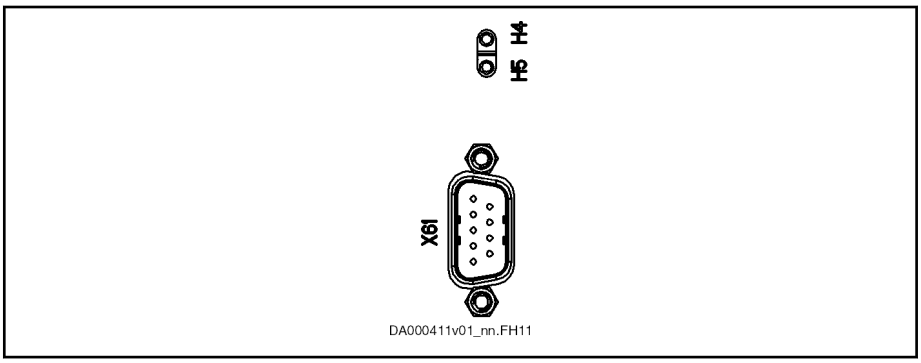

Fig. 6-22: CANopen

Connection Point

Connection point	Type	Number of poles	Type of design	Stranded wire [mm²]	Figure
X61	D-Sub	9	Pins on device	0,25-0,5	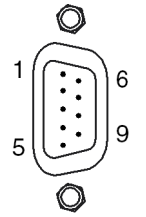

Tab. 6-32: Connection point

Pin Assignment

Pin	Signal	Function
1	n. c.	-
2	CAN-L	Negated CAN signal (Dominant Low)
3	CAN-GND	Reference potential of CAN signals
4	n. c.	-
5	Drain/Shield	Shield connection
6	GND	Reference potential of device
7	CAN-H	Positive CAN signal (Dominant High)
8	n. c.	-
9	n. c.	-

Tab. 6-33: Signal Assignment

Technical Data chapter 7.1.5 "CN - CANopen" on page 215

6.2.5 EMC measures for design and installation

Rules for designing installations with drive controllers in compliance with EMC

The following rules are the basics for designing and installing drives in compliance with EMC.

Mains filter

Properly use a mains filter recommended by Rexroth for radio interference suppression in the supply feeder of the drive system.

Control cabinet grounding

Connect all metal parts of the cabinet with one another over the largest possible surface area to establish a good electrical connection. This also applies to mounting the mains filter. If required, use serrated washers which cut through the paint surface. Connect the cabinet door to the control cabinet using the shortest possible grounding straps.

Line routing

Avoid coupling routes between lines with high potential of noise and noise-free lines; therefore, route signal, mains and motor lines, and power cables separately from another. Minimum distance: 10 cm. Provide separating sheets between power and signal lines. Ground separating sheets several times.

Lines with a high potential of noise include:

- Lines at the mains connection (incl. synchronization connection)
- Lines at the motor connection
- Lines at the DC bus connection

Generally, interference injections are reduced by routing cables close to grounded sheet steel plates. For this reason, cables and wires should not be routed freely in the cabinet, but close to the cabinet housing or mounting plates. Separate the incoming and outgoing cables for the radio interference suppression filter.

Interference suppression elements

Equip the following components in the control cabinet with interference suppression combinations:

- Contactors
- Relays
- Solenoid valves
- Electromechanical operating hours counters

Connect these combinations directly at each coil.

Twisted wires

Twist unshielded wires belonging to the same circuit (feeder and return cable) or keep the surface between feeder and return cable as small as possible. Wires that are not used have to be grounded at both ends.

Lines for measuring systems

Lines for measuring systems have to be shielded. Connect the shield to ground at both ends and over the largest possible surface area. The shield should not be interrupted, e.g., using intermediate terminals.

Digital signal lines

Ground the shields of digital signal lines at both ends (transmitter **and** receiver) over the largest possible surface area and with low impedance. In the case of bad ground connection between transmitter and receiver, also route a bonding conductor (min. 10 mm^2). Braided shields are better than foil shields.

Analog signal lines

Ground the shields of analog signal lines at one end (transmitter **or** receiver) over the largest possible surface area and with low impedance. This avoids low-frequency interference current (in the mains frequency range) on the shield.

Connecting the mains choke

Keep connection lines of the mains choke at the drive controller as short as possible and twist them.

With regenerative supply units, use shielded lines with the shield grounded at both ends for the connection between supply unit and mains choke.

Installing the motor power cable

- Use shielded motor power cables or run motor power cables in a shielded duct
- Use the shortest possible motor power cables
- Ground motor power cable shield at both ends over the largest possible surface area to establish a good electrical connection
- Run shielded motor lines inside the control cabinet
- Do not use any steel-shielded lines
- The shield of the motor power cable cannot be interrupted by mounted components, such as output chokes, sine filters or motor filters

EMC-optimal installation in system and control cabinet

General information

For EMC-optimal installation, it is recommended to spatially separate the area free from interference (mains connection) from the area prone to interference (drive components), as shown in the figures below.

☞ Recommendation: For EMC-optimal installation in the control cabinet, use a separate control cabinet panel for the drive components.

Division into areas (zones)

Sample arrangements in the control cabinet: See section Control cabinet design according to interference areas - exemplary arrangements, page 173.

There are three areas:

1. Control cabinet area free from interference **(area A)**:

   This includes:

   - Supply feeder, input terminals, fuse, main switch, mains side of mains filter for drives and corresponding connecting lines
   - Control voltage or auxiliary voltage connection with power supply unit, fuse and other parts unless connection is run through the mains filter of the AC drives
   - All components that are not electrically connected to the drive system
2. Area prone to interference **(area B)**:
   - Mains connections between drive system and mains filter for drives, mains contactor
   - Interface lines for drive controller
3. Area highly prone to interference **(area C)**:
   - Motor power cables including single cores

Never run lines from one of these areas along lines from another area to eliminate any unwanted interference injection from one area to the other and jumper the filter with regard to high frequency. Use the shortest possible connecting lines.

Recommendation for complex systems: Install drive components in one cabinet and the control units in a second, separate cabinet.

Poorly grounded control cabinet doors can act as antennas. For this reason, connect the control cabinet doors to the cabinet on top, in the middle and on the bottom with short equipment grounding conductors with a cross section of at least 6 mm^2 or, even better, with grounding straps of the same cross section. Make sure connection points have good contact.

Control cabinet design according to interference areas - exemplary arrangements

☞ **Do not operate any additional loads at the mains filter!**

Do not run any other loads at the connection from the mains filter output to the mains connection of the supply unit.

Use separate mains filters for, e.g., motor fans and power supply units.

Mounting and installation

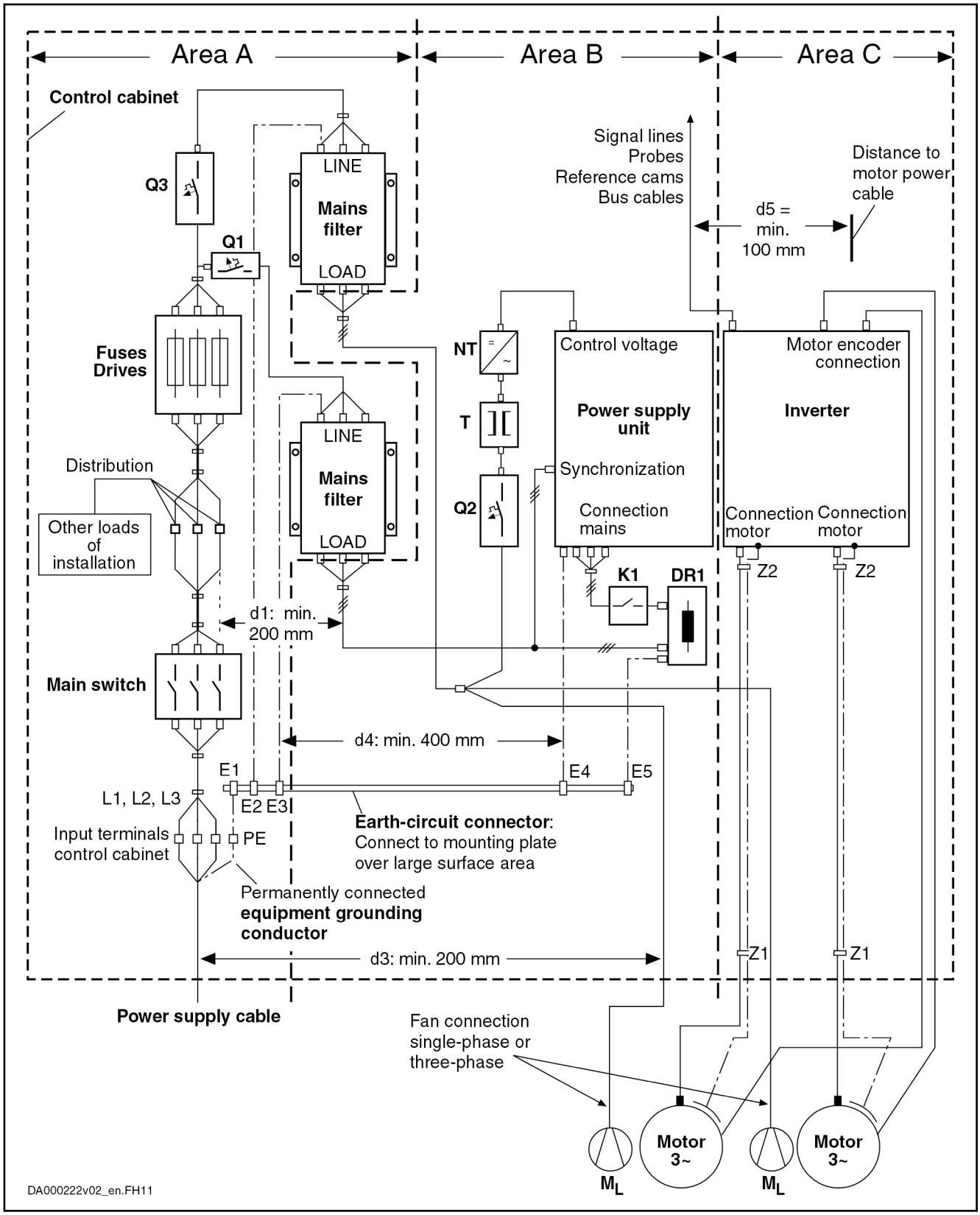

DR1	Mains choke
E1…E5	Equipment grounding conductor of the components

K1	External mains contactor for supply units without integrated mains contactor
M_L	Motor fan
NT	Power supply unit
Q1, Q2, Q3	Fusing
T	Transformer
Z1, Z2	Shield connection points for cables

Fig. 6-23: EMC areas in control cabinet

Design and installation in area A - control cabinet area free from interference

Arranging the components in the control cabinet

Maintain the recommended distance of at least **200 mm** (distance d1 in the figure):

- Between components and electrical elements (switches, pushbuttons, fuses, terminal connectors) in interference-free area A and the components in the two other areas B and C

Maintain the recommended distance of at least **400 mm** (distance d4 in the figure):

- Between magnetic components (such as transformers, mains chokes and DC bus chokes that are directly connected to the power connections of the drive system) and the components and lines free from interference between mains and filter including the mains filter in area A

If these distances are not maintained, the magnetic leakage fields are injected onto the components and lines free from interference connected to the mains, and the limit values at the mains connection are exceeded in spite of the installed filter.

Cable routing for interference-free lines to the mains connection

Maintain the recommended distance of at least **200 mm** (distances d1 and d3 in the figure):

- Between supply feeder or lines between filter and control cabinet exit point in area A and the lines in area B and C

If this is not possible, there are two alternatives:

1. Install shielded lines and connect the shield at several points (at least at the beginning and end of the line) to the mounting plate or the control cabinet housing over a large surface area.
2. Separate lines from the other lines prone to interference in areas B and C with a grounded distance plate vertically attached to the mounting plate.

Install the shortest possible lines within the control cabinet and install them directly on the grounded metal surface of the mounting plate or control cabinet housing.

Mains supply lines from areas B and C cannot be connected to the mains without a filter.

☞ Failure to observe the information on cable routing given in this section will partially or completely neutralize the effect of the mains filter. This will cause the noise level of the interference emission to be higher within the 150 kHz to 40 MHz range and the limit values at the connection points of the machine or system will be exceeded. The specified distances are recommendations, provided the dimensions of the control cabinet allow the lines to be installed accordingly.

Mounting and installation

Routing and connecting a neutral conductor (N)

If a neutral conductor is used together with a three-phase connection, it cannot be installed unfiltered in areas B and C in order to keep interference off the mains.

Motor fan at mains filter

Single-phase or three-phase supply lines for motor fans that are usually routed parallel to motor power cables or lines prone to interference must be filtered:

- In drive systems with **regenerative supply units** through a **separate** single-phase (NFE type) or three-phase filter (NFD type) near the mains connection of the control cabinet
- In drive systems with **only feeding supply units** through the available three-phase filter of the drive system

  On the load side of the mains filter, voltage against ground with a high rise of voltage dv/dt can be present and interfere with the additional loads connected there.

When switching power off, make sure the fan is not switched off.

Loads at drive system mains filter

☞ **Only operate allowed loads at the mains filter of the drive system!**

At the three-phase filter for the power connection of regenerative supply units, it is only allowed to operate the following loads:

- HMV supply unit with mains choke and, if necessary, mains contactor

Do not operate any motor fans, power supply units etc. at the mains filter of the drive system.

Shielding mains supply lines in control cabinet

If there is still a high degree of interference injection on the mains supply line in the control cabinet although you have observed the above instructions (determine using EMC measurement to standard), proceed as follows:

- Only use shielded lines in area A
- Connect shields to the mounting plate at the beginning and end of the line with clips

The same procedure may be required for cables longer than 2 m between the point of power supply connection for the control cabinet and the filter in the control cabinet.

Mains filters for AC drives

Ideally, mount the mains filter on the parting line between areas A and B. Make sure the ground connection between filter housing and drive controller housing is electrically highly conductive.

If **single-phase** loads are connected on the load side of the filter, their current may be a maximum of 10% of the three-phase operating current. A highly imbalanced load on the filter would reduce its interference suppression capacity.

If the mains voltage is more than 480 V, connect the filter to the output side of the transformer and not to the supply side of the transformer.

Grounding

In the case of bad ground connections in the system, the distance between the lines to grounding points E1 and E2 in area A and the other grounding points of the drive system should be at least d4 = 400 mm in order to minimize interference injection from ground and ground cables to the mains supply lines.

See also Division into areas (zones), page 172.

Equipment grounding conductor connection point at machine, system, control cabinet

The equipment grounding conductor of the power cable for the machine, system or control cabinet has to be **permanently connected** at point PE and have a **cross section of at least 10 mm²**, or be complemented by a second equipment grounding conductor using separate terminal connectors (according to

EN 61800-5-1:2007, Section 4.3.5.5.2). If the cross section of the outer conductor is bigger, the cross section of the equipment grounding conductor must also be bigger.

Design and installation in area B - control cabinet area prone to interference

Arranging components and lines

Modules, components and lines in area B should be placed at a distance of at least **d1 = 200 mm** from modules and lines in area A.

Alternative: Shield modules, components and lines in area B using distance plates mounted vertically on the mounting plate from modules and lines in area A or use shielded lines.

Only connect power supply units for auxiliary or control voltage connections in the drive system to the mains with a mains filter. See Division into areas (zones), page 172.

Install the shortest possible lines between drive controller and filter.

Control voltage or auxiliary voltage connection

Only in exceptional cases should you connect power supply unit and fusing for the control voltage connection to phase and neutral conductor. In this case, mount and install these components in area A far away from the areas B and C of the drive system. For details, see section Design and installation in area A - control cabinet area free from interference, page 175.

Run the connection between the control voltage connection of the drive system and the power supply unit used through area B over the shortest distance.

Line routing

Run the lines along grounded metal surfaces in order to minimize radiation of interference fields to area A (transmitting antenna effect).

Design and installation in area C - control cabinet area highly prone to interference

Area C mainly concerns the motor power cables, especially at the connection point at the drive controller.

Influence of the motor power cable

The longer the motor power cable, the greater its leakage capacitance. To comply with a certain EMC limit value, the allowed leakage capacitance of the mains filter is limited. For the calculation of the leakage capacitance, see the documentation on the drive system of the drive controller used.

☞
- Run the shortest possible motor power cables.
- Only use **shielded** motor power cables from Rexroth.

Routing motor power and motor encoder cables

Route the motor power and motor encoder cables along grounded metal surfaces both inside and outside the control cabinet in order to minimize radiation from interference fields. If possible, route the motor power and motor encoder cables in metal-grounded cable ducts.

Route the motor power and motor encoder cables:

- With a distance of at least **d5 = 100 mm** from interference-free lines, as well as to signal cables and signal lines

  (alternatively separated by a grounded distance plate)
- In separate cable ducts, if possible

Routing motor power cables and mains connection lines

For converters (drive controllers with individual mains connection), route motor power cables and (unfiltered) mains connection lines **parallel to one another for a maximum distance of 300 mm**. After that distance, route motor power cables and power supply cables in opposite directions and preferably in separate **cable ducts**.

Ideally, the motor power cables should exit the control cabinet at a distance of at least **d3 = 200 mm** from the (filtered) power supply cable.

Converter - routing motor power cables

With cable duct

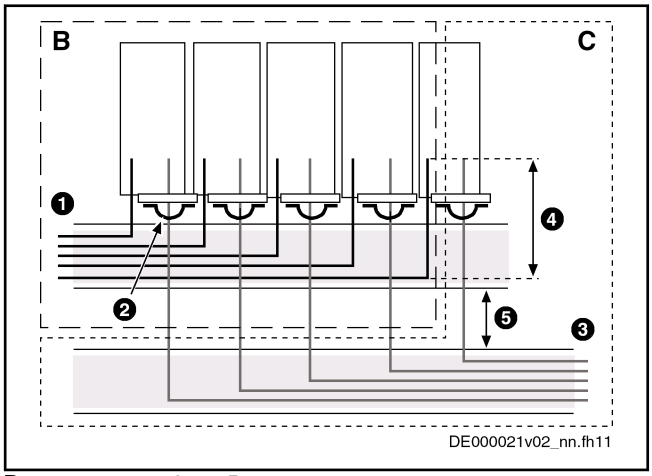

B	Area B
C	Area C
1	Cable duct for mains connection lines
2	Shield connection of motor power cable with clips at least at one point; alternatively, at the device or control cabinet mounting plate
3	Cable duct for motor power cables
4	Parallel routing of mains connection lines and motor power cables over a maximum of 300 mm
5	Distance of at least 100 mm or separated by a grounded distance plate

Fig. 6-24: Routing motor power cables with cable duct

Without cable duct

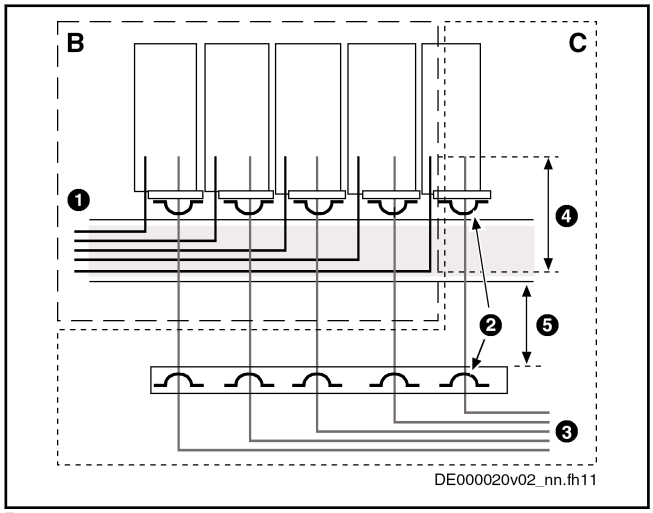

B	Area B
C	Area C
1	Cable duct for mains connection lines
2	Shield connection of motor power cable with clips at least at one point; alternatively, at the device or control cabinet mounting plate
3	Control cabinet outlet of motor power cables
4	Parallel routing of mains connection lines and motor power cables over a maximum of 300 mm
5	Distance of at least 100 mm or separated by a grounded distance plate

Fig. 6-25: Routing motor power cables without cable duct

Tab. 6-34: Routing converter cables

Ground connections

Housing and mounting plate

It is possible to avoid the emission of interference with proper ground connections because interference is discharged to ground through the most direct route.

Ground connections of the metal housings for EMC-critical components (such as filters, devices of the drive system, connection points of the cable shields, devices with microprocessor and switching power supply units) have to be solidly contacted over a large surface area. This also applies to all screw connections between mounting plate and control cabinet wall and to mounting a ground bar to the mounting plate.

The best solution is to use a zinc-coated mounting plate. Compared to a varnished plate, the connections in this case have good long-term stability.

Connection elements

For varnished mounting plates, always use screw connections with tooth lock washers and zinc-coated, tinned screws as connection elements. At the connection points, remove the varnish so that there is safe electrical contact over a large surface area. Achieve contact over a large surface area using bare connection surfaces or several connection screws. For screw connections,

you can establish the contact to varnished surfaces by using tooth lock washers.

Metal surfaces

Always use connection elements (screws, nuts, plain washers) with a highly conductive surface.

Highly conductive surfaces are those with bare, zinc-coated or tinned metal surfaces.

Poorly conductive surfaces are those with anodized, yellow chromatized, black gunmetal finished or lacquered metal surfaces.

Ground wires and shield connections

When connecting ground wires and shield connections, what is important is not the cross section of the wire, but the area of the contact surface, since high-frequency interference currents mainly flow on the surface of the conductor.

Always connect cable shields, especially shields for the motor power cables, to ground potential over a large surface area.

Installing signal lines and signal cables

Line routing

For measures to prevent interference, see the Project Planning Manuals for each device. We also recommend the following:

- Route signal and control lines away from power cables at a minimum distance of **d5 = 100 mm** (seeDivision into areas (zones), page 172) or with a grounded separating sheet. The best way is to route them in separate cable ducts. If possible, only route signal lines into the control cabinet at one point.
- If signal lines cross power cables, route them at an angle of 90° in order to avoid interference injection.
- Ground unused and connected spare cables at both ends at least in order to avoid an antenna effect.
- Do not use more line than is necessary.
- Run cables as close to grounded metal surfaces as possible (reference potential). Closed, grounded cable ducts or metal pipes are ideal, but are only needed to meet strict requirements (sensitive instrument leads).
- Avoid suspended lines or lines routed along synthetic carriers, because they function like reception antennas (noise immunity) and transmitting antennas (emission of interference). Exceptional cases are flexible cable tracks over short distances of at most 5 m.

Shielding

Connect the cable shield immediately at the devices in the shortest and most direct way possible and over the largest possible surface area.

Connect the shield of **analog signal lines** at one end over a large surface area, normally in the control cabinet at the analog device. Make sure the connection to ground/housing is short and over a large surface area.

Connect the shield of **digital signal lines** at both ends over a large surface area and in short form. In case of potential differences between line beginning and end, run an additional bonding conductor in parallel. This prevents compensating current from flowing via the shield. The recommended cross section is 10 mm^2.

Separable connections absolutely must be equipped with connectors that have a grounded metal housing.

In case of unshielded lines belonging to the same circuit, twist feeder and return cable.

General interference suppression measures for relays, contactors, switches, chokes and inductive loads

If inductive loads, such as chokes, contactors or relays are switched by contacts or semiconductors in conjunction with electronic devices and components, suitable interference suppression has to be provided for them:

- By arranging free-wheeling diodes for DC operation
- By arranging commercial RC interference suppression elements based on contactor type directly on the inductance for AC operation

Only the interference suppression element arranged immediately on the inductance serves this purpose. Otherwise, the emitted noise level is too high and can affect the function of the electronic system and the drive.

7 Technical data of the components

7.1 Control section

7.1.1 EC - standard encoder evaluation

Supported encoder systems

Supported encoder systems

Encoder systems with a supply voltage of **5 and 12 V**:

- MSM motor encoder
- MS2N motor encoder
- MSK motor encoder
- $1V_{pp}$ sin-cos encoder; HIPERFACE®
- $1V_{pp}$ sin-cos encoder; EnDat 2.1; EnDat 2.2
- $1V_{pp}$ sin-cos encoder; with reference track
- 5V TTL square-wave encoder; with reference track
- SSI
- Combined encoder for SSI (combination of SSI and $1V_{pp}$ sin-cos encoder)
- Resolver (resolvers are **not** supported if optional "Safe Motion" safety technology is also in use)
- Hall sensor box SHL02.1
- Digital Hall sensor in conjunction with Hall sensor adapter box SHL03.1

Encoder type

IndraDyn S MSM motors (5V supply voltage)

Properties

Encoder systems of the MSM motors are digital encoder systems that can be evaluated in absolute form.

The optionally available battery box (SUP-E0x-MSM-BATTERYBOX) facilitates the multi-turn functionality.

Connection diagram

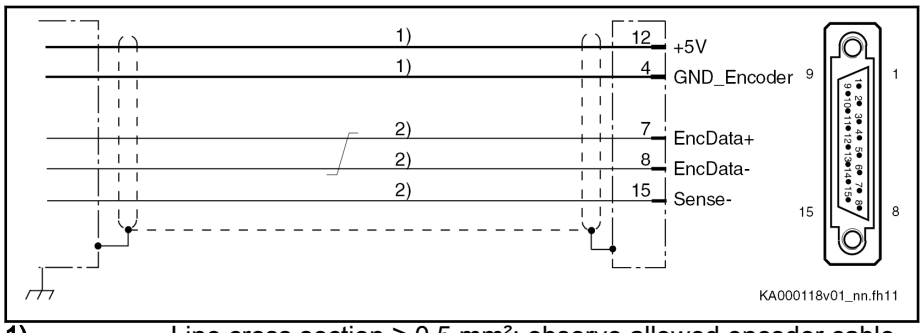

1) Line cross section ≥ 0.5 mm²; observe allowed encoder cable length

2) Line cross section ≥ 0.14 mm²

Fig. 7-1: EC connection diagram with encoder system of IndraDyn S MSM motors

☞ For **direct** connection to the encoder system, use our **RKG0033** or **RKG0062** cable.

Power supply

5 V (the voltage is made available via the EC interface)

Technical data of the components

	Technical specification of the power supply: See chapter "5 V power supply" on page 195
Cable length	**40 m** at most

IndraDyn S MSK/QSK motors S1/M1, S2/M2, S3/M3, S5/M5 (12 V supply voltage)

Properties

Encoder systems of the MSK/QSK motors are HIPERFACE® (S1/M1, S3/M3, S5/M5) or EnDat 2.1 (S2/M2) encoder systems.

The type code of the motor shows whether or not the encoder system supports the single-turn (Sx) or multi-turn (Mx) functionality. Example: The MSK050C-0600-NN-**S1**-UG0-NNNN motor has a single-turn HIPERFACE® encoder system.

Connection diagram

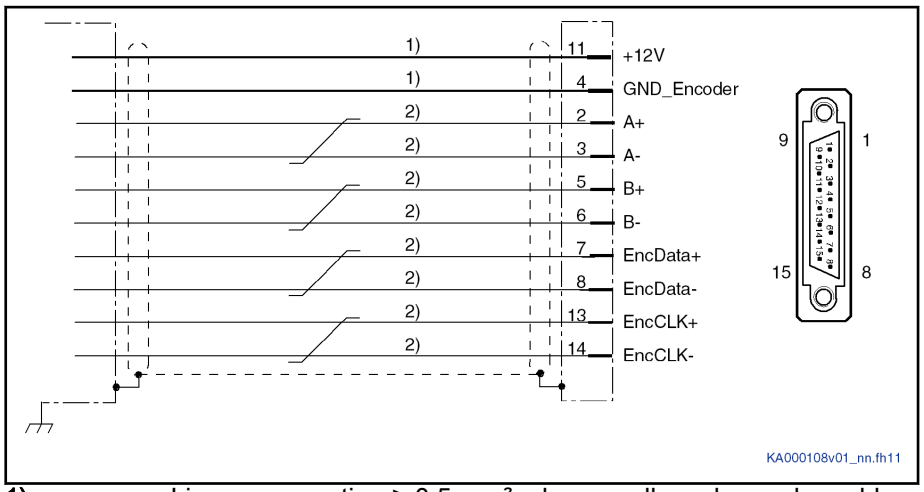

1) Line cross section ≥ 0.5 mm²; observe allowed encoder cable length

2) Line cross section ≥ 0.14 mm²

Fig. 7-2: MSK/QSK encoder interface connection diagram for S1/M1, S2/M2, S5/M5 encoder systems

For **direct** connection to the encoder system, use our **RKG4200** cable.

Power supply

12 V (the voltage is made available via the EC interface)

Technical specification of the power supply: See chapter "12 V power supply" on page 195

Cable length

The maximum allowed cable length depends on several factors: See chapter "Encoder cable length" on page 197

HIPERFACE® (12 V supply voltage)

See the connection diagram for how to connect the encoder system.

Connection diagram

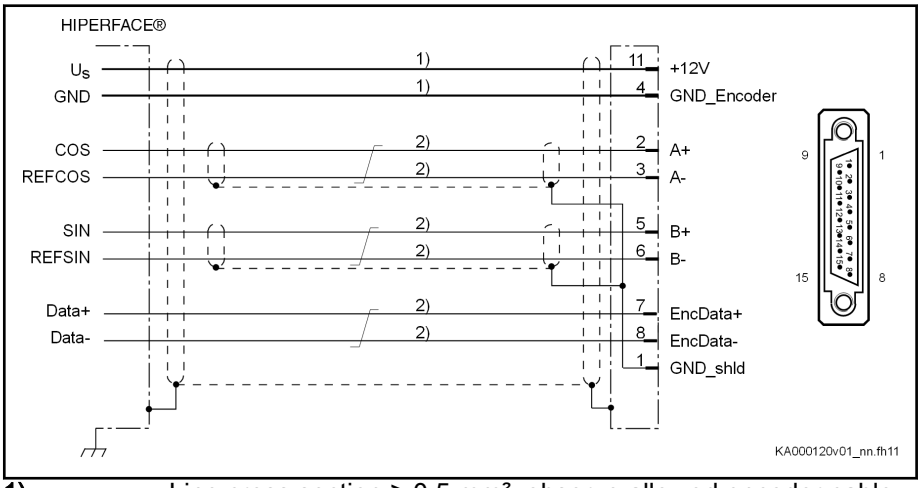

1) Line cross section ≥ 0.5 mm²; observe allowed encoder cable length

2) Line cross section ≥ 0.14 mm²

Fig. 7-3: HIPERFACE® encoder system connection diagram

Power supply

The HIPERFACE® encoder system needs a supply voltage of 12 V. This supply voltage is made available via the EC interface.

Technical specification of the power supply: See chapter "12 V power supply" on page 195

☞ Please observe that the third-party encoder used has to be suited for the voltage available at the EC interface as the encoder supply voltage.

Cable length

The maximum possible cable length depends on several factors: See chapter "Encoder cable length" on page 197

EnDat 2.1 according to Heidenhain standard (5 V supply voltage)

See the connection diagram for how to connect the encoder system.

Connection diagram

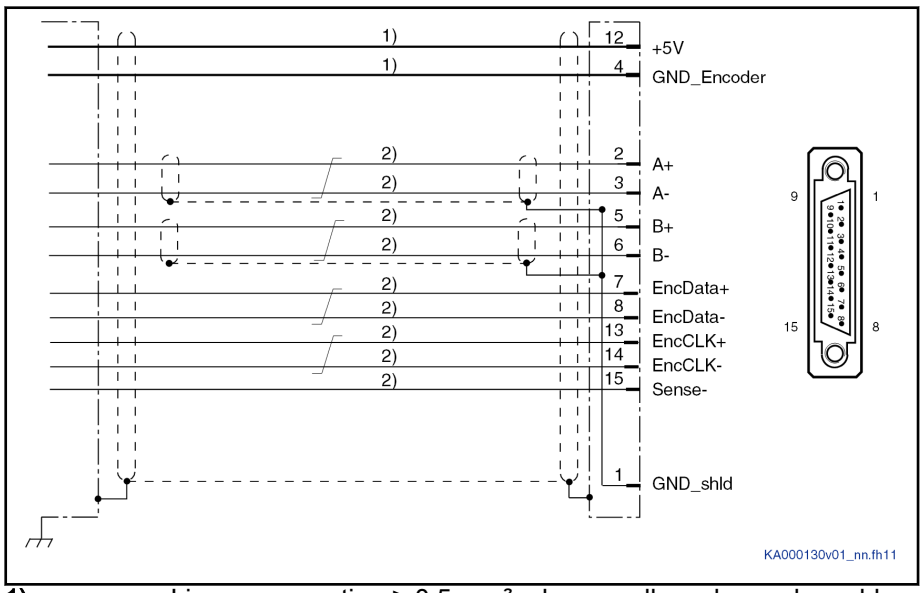

1) Line cross section ≥ 0.5 mm²; observe allowed encoder cable length

2) Line cross section ≥ 0.14 mm²

Fig. 7-4: EC connection diagram with EnDat 2.1 encoder system

☞ For **direct** connection to the encoder system, use our **RKG0036** cable.

Power supply

5 V (the voltage is made available via the EC interface)

Technical specification of the power supply: See chapter "5 V power supply" on page 195

Cable Length

75 m at most (when using the Sense function)

When you do not use the Sense function, the maximum cable length is reduced (see chapter "Encoder cable length" on page 197).

Technical properties

Use the Sense function to ensure stable power supply at the encoder. Description of the Sense function: See chapter "5 V power supply" on page 195

Technical data of the components

$1V_{pp}$ according to Heidenhain standard (5 V supply voltage)

See the connection diagram for how to connect the encoder system.

Connection diagram

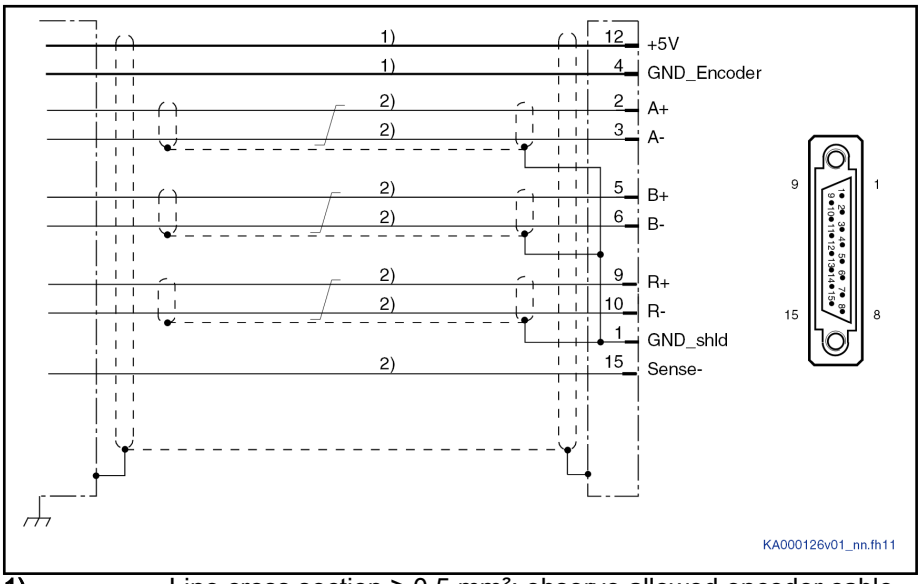

1) Line cross section ≥ 0.5 mm²; observe allowed encoder cable length

2) Line cross section ≥ 0.14 mm²

Fig. 7-5: EC connection diagram with $1V_{pp}$ encoder system

☞ For **direct** connection to the encoder system, use our **RKG0035** cable.

Power supply

5 V (the voltage is made available via the EC interface)

Technical specification of the power supply: See chapter "5 V power supply" on page 195

Cable Length

75 m at most (when using the Sense function)

When you do not use the Sense function, the maximum cable length is reduced (see chapter "Encoder cable length" on page 197).

Technical properties

Use the Sense function to ensure stable power supply at the encoder. Description of the Sense function: See chapter "5 V power supply" on page 195

$1V_{pp}$ (12 V supply voltage)

See the connection diagram for how to connect the encoder system.

Connection diagram

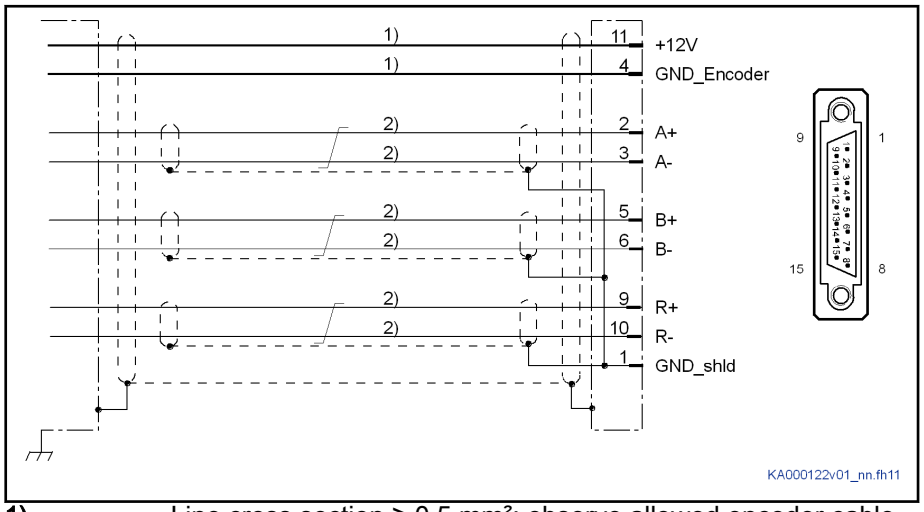

1) Line cross section ≥ 0.5 mm²; observe allowed encoder cable length

2) Line cross section ≥ 0.14 mm²

Fig. 7-6: $1V_{pp}$ encoder system connection diagram

Power supply

12 V (the voltage is made available via the EC interface)

Technical specification of the power supply: See chapter "12 V power supply" on page 195

Cable length

The maximum allowed cable length depends on several factors: See chapter "Encoder cable length" on page 197

Technical data of the components

TTL (5 V supply voltage)

See the connection diagram for how to connect the encoder system.

Connection diagram

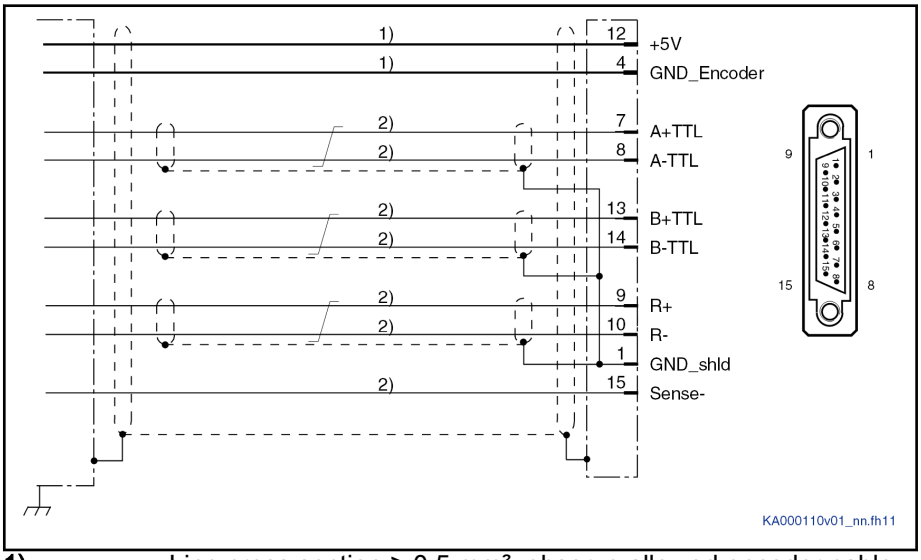

1) Line cross section ≥ 0.5 mm²; observe allowed encoder cable length

2) Line cross section ≥ 0.14 mm²

Fig. 7-7: EC connection diagram with TTL encoder system

Power supply

5 V (the voltage is made available via the EC interface)

Technical specification of the power supply: See chapter "5 V power supply" on page 195

Cable Length

75 m at most (when using the Sense function)

When you do not use the Sense function, the maximum cable length is reduced (see chapter "Encoder cable length" on page 197).

Technical properties

Use the Sense function to ensure stable power supply at the encoder. Description of the Sense function: See chapter "5 V power supply" on page 195

TTL (12 V supply voltage)

See the connection diagram for how to connect the encoder system.

Connection diagram

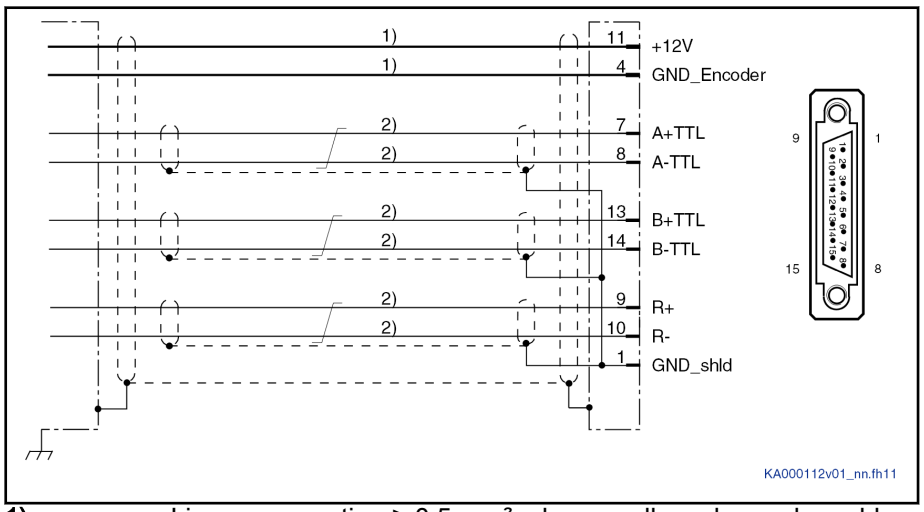

1) Line cross section ≥ 0.5 mm²; observe allowed encoder cable length

2) Line cross section ≥ 0.14 mm²

Fig. 7-8: TTL encoder system connection diagram

Power supply

12 V (the voltage is made available via the EC interface)

Technical specification of the power supply: See chapter "12 V power supply" on page 195

Cable length

The maximum allowed cable length depends on several factors: See chapter "Encoder cable length" on page 197

Technical data of the components

SSI (5 V supply voltage)

See the connection diagram for how to connect the encoder system.

Connection diagram

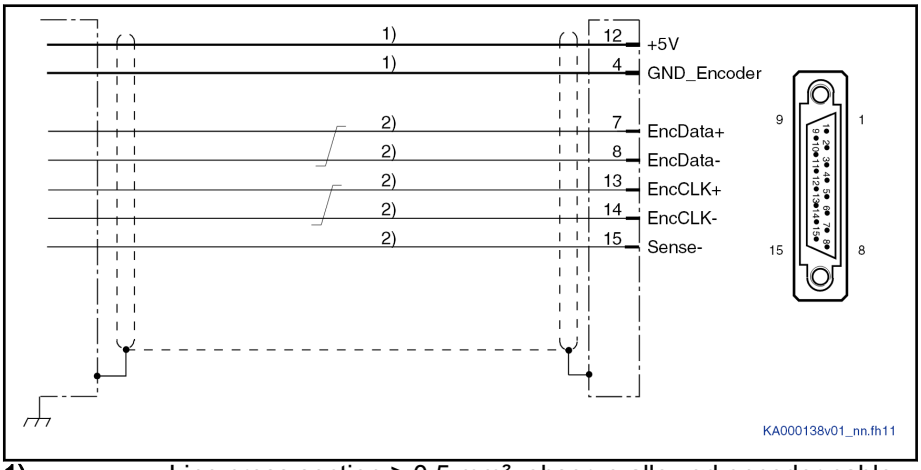

1) Line cross section ≥ 0.5 mm²; observe allowed encoder cable length

2) Line cross section ≥ 0.14 mm²

Fig. 7-9: EC connection diagram with SSI encoder system

Power supply

5 V (the voltage is made available via the EC interface)

Technical specification of the power supply: See chapter "5 V power supply" on page 195

Cable Length

75 m at most (when using the Sense function)

When you do not use the Sense function, the maximum cable length is reduced (see chapter "Encoder cable length" on page 197).

Technical properties

Use the Sense function to ensure stable power supply at the encoder. Description of the Sense function: See chapter "5 V power supply" on page 195

SSI (12 V supply voltage)

See the connection diagram for how to connect the encoder system.

Connection diagram

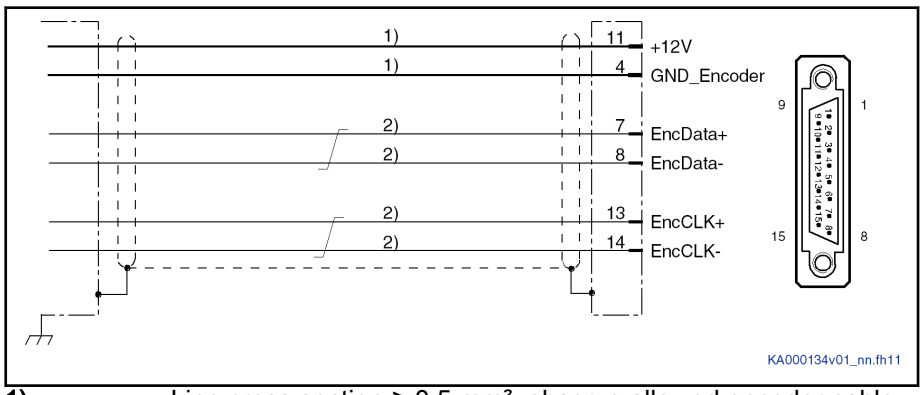

1) Line cross section ≥ 0.5 mm²; observe allowed encoder cable length

2) Line cross section ≥ 0.14 mm²

Fig. 7-10: SSI encoder system connection diagram

Power supply

12 V (the voltage is made available via the EC interface)

Technical specification of the power supply: See chapter "12 V power supply" on page 195

Cable length

The maximum allowed cable length depends on several factors: See chapter "Encoder cable length" on page 197

Combined encoder for SSI (5 V supply voltage)

The combined encoder for SSI is a combination of SSI and sin-cos encoder $1V_{pp}$.

See the connection diagram for how to connect the encoder system.

Connection diagram

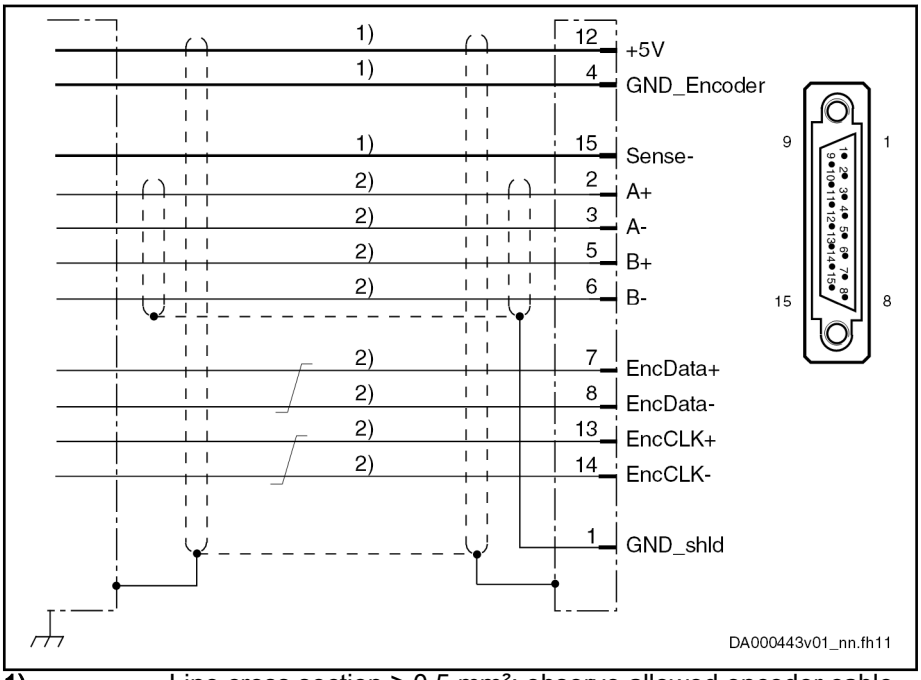

1) Line cross section ≥ 0.5 mm²; observe allowed encoder cable length

2) Line cross section ≥ 0.14 mm²

Fig. 7-11: EC connection diagram with SSI encoder system

Power supply

5 V (the voltage is made available via the EC interface)

Technical specification of the power supply: See chapter "5 V power supply" on page 195

Cable Length

75 m at most (when using the Sense function)

When you do not use the Sense function, the maximum cable length is reduced (see chapter "Encoder cable length" on page 197).

Technical properties

Use the Sense function to ensure stable power supply at the encoder. Description of the Sense function: See chapter "5 V power supply" on page 195

Resolver without encoder data memory

See the connection diagram for how to connect the encoder system.

Connection diagram

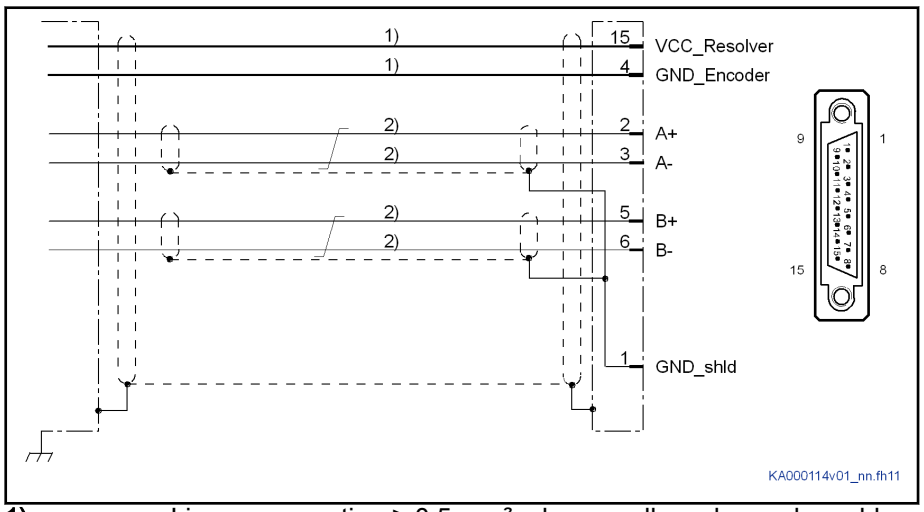

1) Line cross section ≥ 0.5 mm²; observe allowed encoder cable length

2) Line cross section ≥ 0.14 mm²

Fig. 7-12: EC connection diagram with resolver encoder system

Power supply

The EC interface supplies the resolver encoder system with a carrier voltage amplitude of 11 V_{pp}.

Technical specification of the power supply: See chapter "Resolver power supply" on page 195

☞ Please observe that the resolver encoder used has to be suited for the voltage available at the EC interface as the encoder supply voltage.

Cable length

75 m at most

Specific technical features

The encoder evaluation has been sized for resolvers with a **transfer ratio** of **0.5**.

Resolvers are **not** supported if an optional "Safe Motion" safety technology is available at the same time.

Technical data of the components

Hall sensor box SHL02.1 (12 V supply voltage)

See the connection diagram for how to connect the Hall sensor box SHL02.1.

Connection diagram

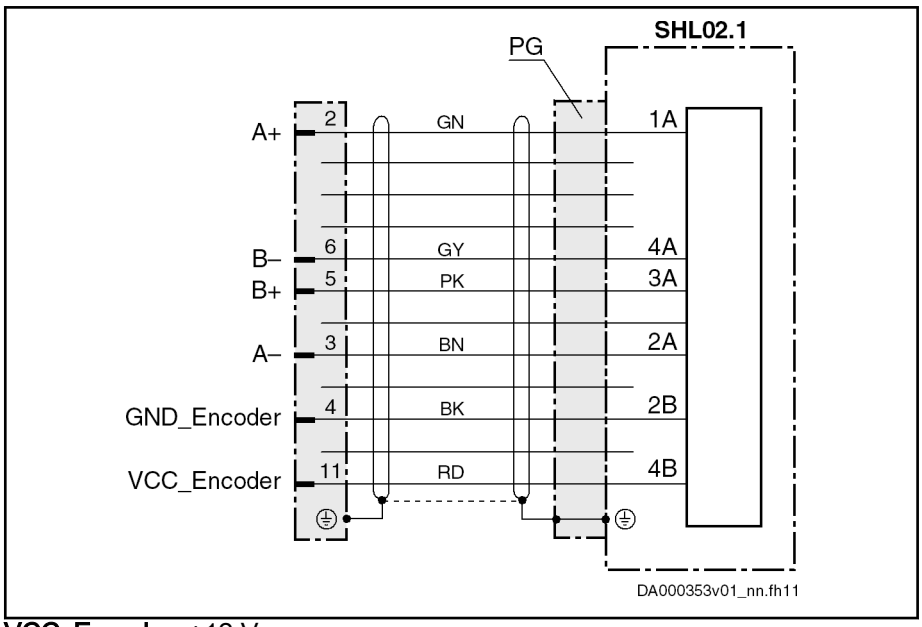

VCC_Encoder +12 V

Fig. 7-13: Hall sensor box SHL02.1 connection diagram

Power supply

12 V (the voltage is made available via the EC interface)

Technical specification of the power supply: See chapter "12 V power supply" on page 195

Cable length

The maximum allowed cable length depends on several factors: See chapter "Encoder cable length" on page 197

Specific technical features

📖 For detailed information on the Hall sensor box SHL02.1, see the Functional Description "Rexroth Hall sensor box SHL02.1" (R911292537).

Power supply

5 V power supply

5 V power supply

Data	Unit	min.	typ.	max.
DC output voltage +5V	V	5.0		5.25
Output current	mA			500 1)

1) The sum of the power consumptions of all connected encoder systems (5 V / 12 V) should not exceed **6 W**..

Tab. 7-1: 5 V power supply

Switching off power supply via firmware

The "parking axis" firmware command (C1600) causes the encoder power supply to be switched off.

Sense function

The EC encoder evaluation allows correcting the 5 V supply voltage at the encoder. It is thereby possible, within certain limits, to compensate for voltage drops on the encoder cable.

Functional principle: The current consumption of the connected encoder system generates a voltage drop due to the ohmic resistance of the encoder cable (line cross section and line length). This reduces the signal at the encoder input. The actual value of the 0 V encoder potential at the encoder is measured via a separate "Sense" line (Sense-) and fed back to the drive controller. Thus, the drive controller can influence the voltage of the encoder supply.

☞ For correct "Sense" evaluation, the encoder supply lines "+5V" and "GND_Encoder" have to have the same line cross section.

If the encoder has a "Sense-" connection, connect the "Sense" line at this connection. A possibly existing "Sense+" connection is not used.

If the encoder has no "Sense" connection, apply the 0 V encoder potential to the "Sense-" line on the encoder side.

12 V power supply

12 V power supply

Data	Unit	min.	typ.	max.
Voltage for encoder supply	V	10.7	12	12.3
Output current	mA			500 1)

1) The sum of the power consumptions of all connected encoder systems (5 V / 12 V) should not exceed **6 W**..

Tab. 7-2: 12 V power supply

Switching off power supply via firmware

The "parking axis" firmware command (C1600) causes the encoder power supply to be switched off.

Resolver power supply

Resolver encoder system

Data	Unit	min.	typ.	max.
AC output voltage VCC_Resolver (peak-peak value)	V	8.3	10	12
Output frequency sine	kHz		8	

Data	Unit	min.	typ.	max.
Output current (peak value)	mA			60
Output current (rms value)	mA			40

Tab. 7-3: Resolver encoder supply

Switching off power supply via firmware

The "parking axis" firmware command (C1600) causes the encoder power supply to be switched off.

Encoder cable length

☞ Use lines with the same line cross section for encoder supply.

Allowed encoder cable length for 5 V encoder systems without Sense function

If the encoder system used does not support the Sense function, the maximum possible cable length results from the diagram below.

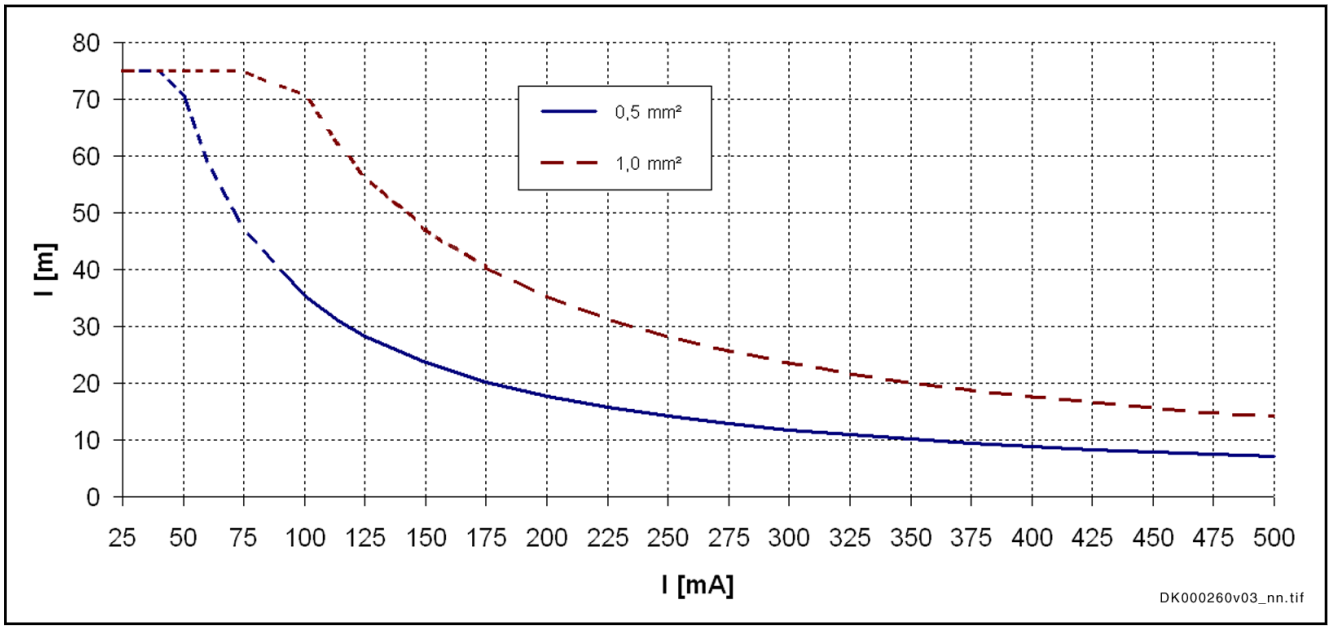

l [mA] Encoder current consumption
l [m] Cable length
0.5 mm²; 1.0 mm² Line cross sections

Fig. 7-14: Maximum allowed encoder cable lengths for 5 V encoder systems without Sense connection depending on line cross section

Allowed encoder cable length for 5 V encoder systems with Sense function

75 m at most; (exception: 40 m at most for IndraDyn S MSM motors)

(Besides, the maximum allowed cable lengths depend on the motor size. See documentation of motor used.)

The cross section of the supply voltage lines has to be at least 0.5 mm².

Allowed encoder cable length for 12 V encoder systems

Requirements:

- The **cross section** of the supply voltage lines is at least **0.5 mm²**
- The minimum allowed **supply voltage** at the encoder is **10 V**

Technical data of the components

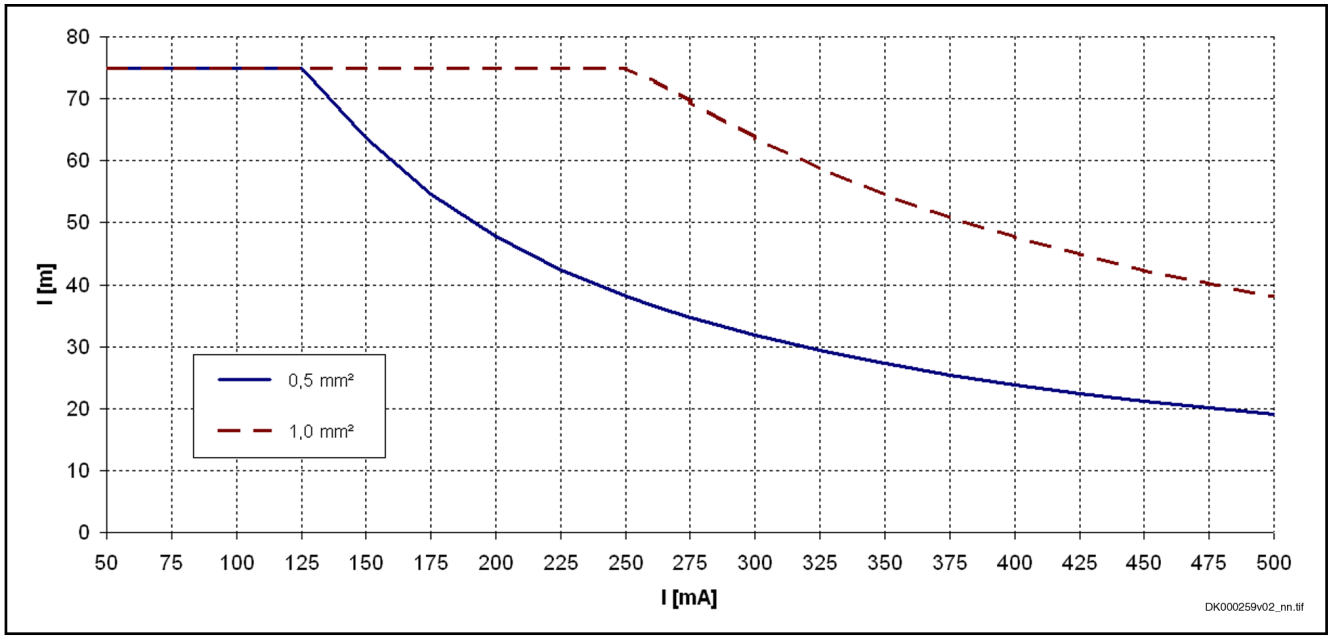

l [mA]	Encoder current consumption
l [m]	Cable length
0.5 mm²; 1.0 mm²	Line cross sections

Fig. 7-15: Maximum allowed encoder cable lengths for 12 V encoder systems depending on line cross section at supply voltage of 10 V

☞ Nominal current consumption of the MSK motor encoders: 60 mA

Allowed encoder cable length for resolver encoder systems

75 m at most (The cross section of the supply voltage lines has to be at least 0.5 mm².)

Technical data of EC encoder evaluation

Input circuit for sine signals A+, A-, B+, B-, R+, R-

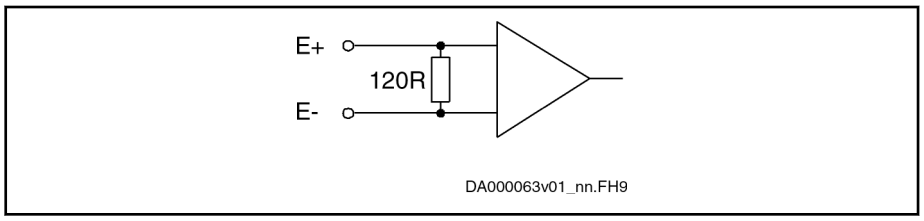

Fig. 7-16: Input circuit for sine signals (block diagram)

Properties of differential input for sine signals

Data	Unit	min.	typ.	max.
Amplitude of encoder signal peak-peak ($U_{PPencodersignal}$)	V	0.8	1.0	1.2
Cut-off frequency (-3 dB)	kHz		400	
Converter width A/D converter	Bit		12	
Input resistance	ohm		120	

Tab. 7-4: Differential input sine

Resolver input circuit for A+, A-, B +, B-

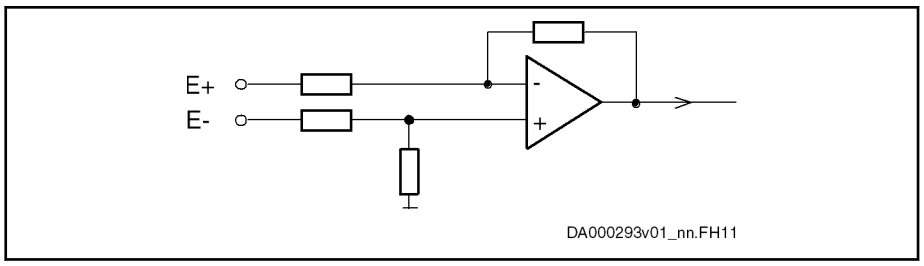

Fig. 7-17: Input circuit for resolver evaluation (block diagram)

Input circuit for square-wave signals

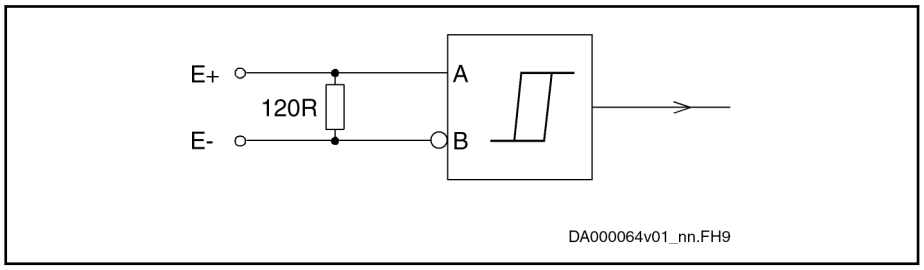

Fig. 7-18: Input circuit for square-wave signals (block diagram)

Properties of differential input for square-wave signals

Data	Unit	min.	typ.	max.
Input voltage "high"	V	2.4		5.0
Input voltage "low"	V	0		0.8
Input frequency	kHz			1000
Input resistance	ohm		120	

Tab. 7-5: Differential input square-wave signals

Technical data of the components

Differential input for resolver operation

Data	Unit	min.	typ.	max.
Amplitude encoder signal sine (U_{pp})	V		5	6
Input resistance	kOhm		12	
Converter width A/D converter	Bit		12	

Tab. 7-6: Resolver operation input data

Signal assignment to the actual position value

Signal assignment [1]	Signal designation	Signal shape	Actual position value (with default setting)
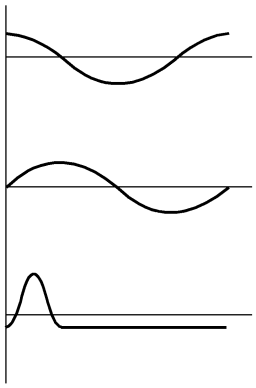 DK000089v01_nn.FH9	A+ A- B+ B- R+ R- 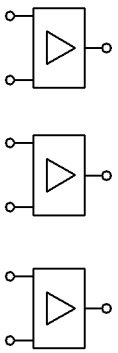 DF000381v01_nn.FH11	Sine (1 V_{pp}) Without absolute value	**Rotary motor:** Increasing actual position values with clockwise motor motion (when viewed from the front toward the A-side shaft end) **Linear Rexroth motor:** Increasing actual position values with motor motion in the direction of cable outlet
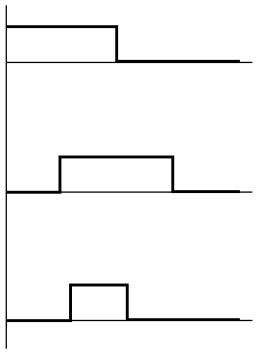 DK000090v01_nn.FH9	A+TTL A-TTL B+TTL B-TTL R+ R- 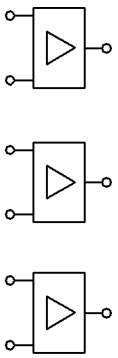 DF000380v01_nn.FH11	Square-wave (TTL) Without absolute value	
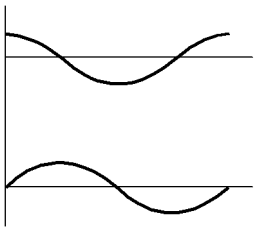 DK000088v01_nn.FH9	A+ A- B+ B- 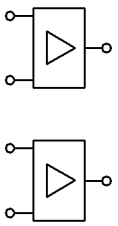 DF000382v01_nn.FH11	Sine (1 V_{pp}) With absolute value (e.g., EnDat)	
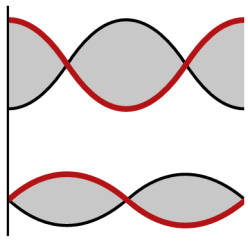 DK000365v01_nn.FH11 Amplitude-modulated signal	A+ A- B+ B- 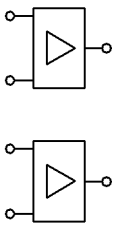 DF000382v01_nn.FH11	Resolver	

1) See following note

Tab. 7-7: Signal assignment to the actual position value

Technical data of the components

☞ The encoder signal assignment to the inputs is based on clockwise rotation (front view toward motor shaft).

- Track A (A+, A-, "cos") advances track B (B+, B-, "sin") 90° electrically.
- The actual position value increases (prerequisite: negation of the encoder signals was not parameterized).
- If available, the reference track R (R+, R-) provides the reference mark pulse at positive signals of track A and track B (in the so-called "0-th" quadrant).

☞ Standard setting: See Functional Description of firmware.

7.1.2 EM - encoder emulation

Cables

Data	Symbol	Unit	max.
Length (shielded cable)	l_{shield}	m	40
Length (unshielded cable)	$l_{unshield}$	m	30
Capacitance	C	pF/m	60

Tab. 7-8: Cables

Incremental encoder emulation

Connection

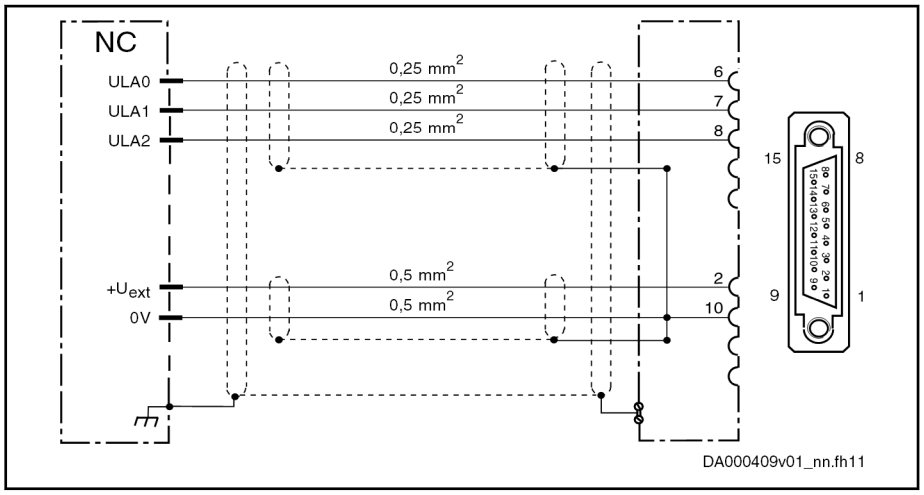

Fig. 7-19: Incremental encoder with signal level conversion (single-ended)

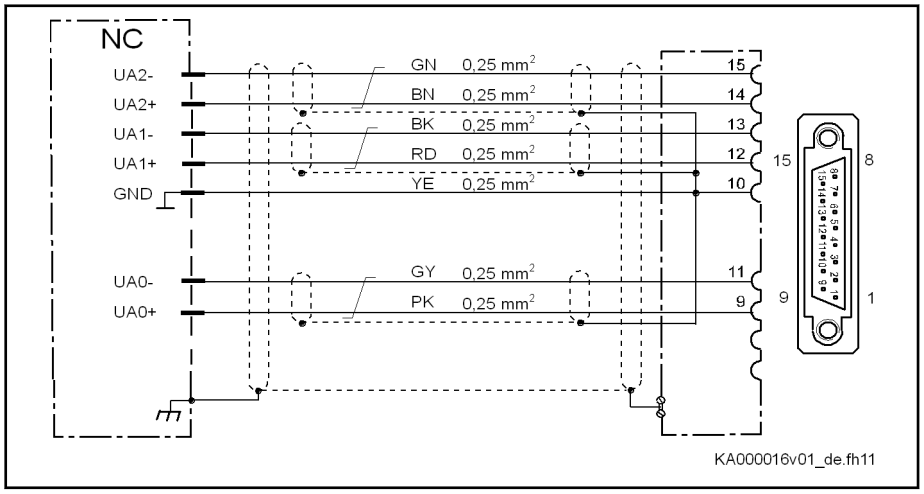

Fig. 7-20: Incremental encoder (RS422)

Electrical data

Single-ended

Data	Symbol	Unit	min.	typ.	max.
Input voltage	U_{ext}	V	5	-	30
Current consumption at U_{ext}	I_{ext}	mA	25	-	$25 + 3 \times I_{out}$
Output voltage "high"	U_{Out_High}	V	U_{ext} - 2V	-	U_{ext}
Output voltage "low"	U_{Out_Low}	V	-	-	1.5
Output current	I_{Out}	mA	-	-	40
Output frequency	f	MHz	-	1	-
Overload protection	-	-	Present		
Short circuit protection	-	-	Present		

Tab. 7-9: Single-ended

RS422

Data	Symbol	Unit	min.	typ.	max.
Output voltage "high"	U_{Out_High}	V	2.5	-	5
Output voltage "low"	U_{Out_Low}	V	0	-	0.5
Output current	I_{Out}	mA	-	-	20
Output frequency	f	MHz	-	4	-
Overload protection	-	-	Present		
Short circuit protection	-	-	Present		

Tab. 7-10: Outputs, RS422

Data	Symbol	Unit	min.	typ.	max.
Input voltage "high"	U_{In_High}	V	2.5	-	5
Input voltage "low"	U_{In_Low}	V	0	-	0.5
Input resistance (difference)	R_{In_D}	ohm	110	-	130
Input resistance	R_{In}	kOhm	-	150	-
Output frequency	f	MHz	-	4	-
Overload protection	-	-	Present		
Short circuit protection	-	-	Present		

Tab. 7-11: Inputs, RS422

Absolute encoder emulation (SSI format)

Connection

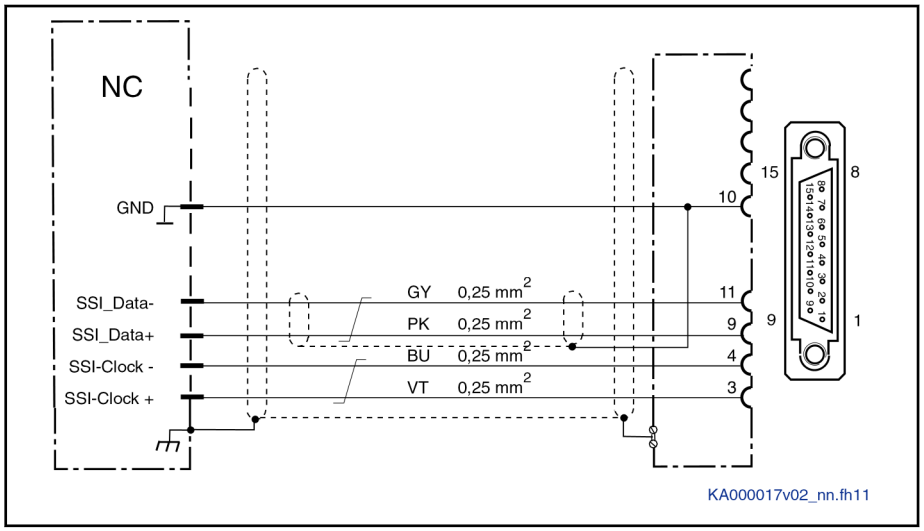

Fig. 7-21: Output of absolute actual position values according to SSI format

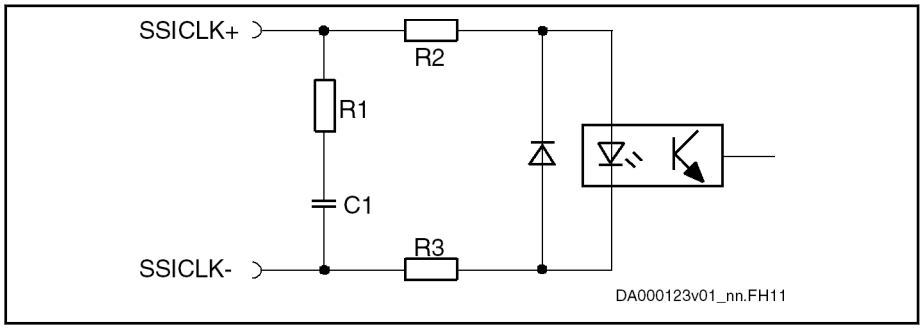

Fig. 7-22: Differential input circuit (block diagram)

Electrical data

Differential inputs, absolute encoder emulation

Data	Symbol	Unit	min.	typ.	max.
Input voltage "high"	U_{In_High}	V	2.5	-	5
Input voltage "low"	U_{In_Low}	V	0	-	0.5
Input resistance (difference)	R_{In_D}	ohm	110	-	130
Input resistance	R_{In}	kOhm	150		
Clock frequency	f	kHz	100-1000		
Overload protection	-	-	Present		
Short circuit protection	-	-	Present		

Tab. 7-12: Differential inputs

Differential outputs, absolute encoder emulation

Data	Symbol	Unit	min.	typ.	max.
Output voltage "high"	U_{Out_High}	V	2.5	-	5
Output voltage "low"	U_{Out_Low}	V	0	-	0.5

Technical data of the components

Data	Symbol	Unit	min.	typ.	max.
Output current	I_{Out}	mA	-	-	20
Output frequency	f	MHz	-	-	1
Load capacitance between output and 0 V		nF	-	-	10
Terminating resistor at load	R_{Term}	ohm	150-180		
Overload protection	-	-	Present		
Short circuit protection	-	-	Present		

Tab. 7-13: Differential outputs

☞ The differential output corresponds to the RS422 specifications. On the control side, a line terminating resistor has to be available for the SSI data signal. If this resistor is not available, connect an external line terminating resistor (150-180 ohm).

Pulse diagram

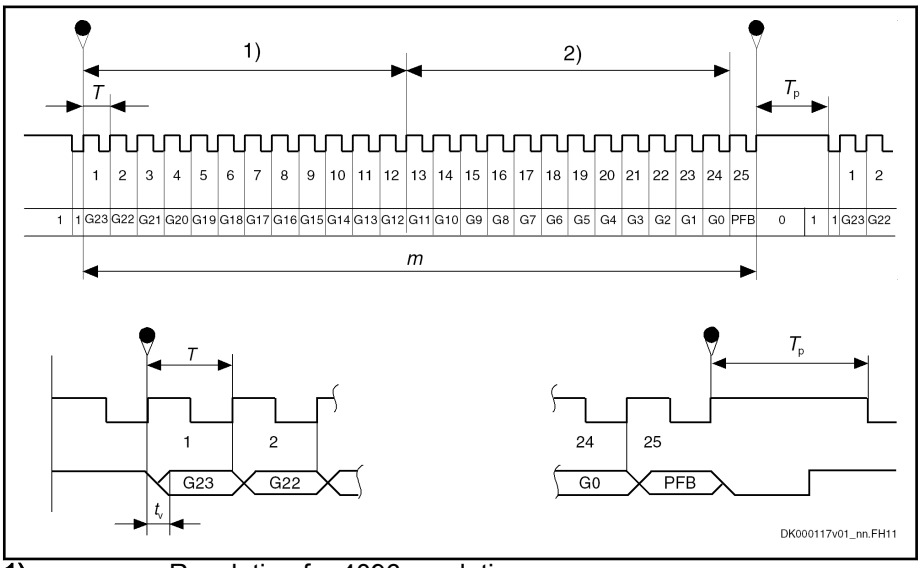

1)	Resolution for 4096 revolutions
2)	Resolution for 1 revolution
G0	Least significant bit in Gray code
G23	Most significant bit in Gray code
m	Stored parallel information
T	Clock time
T_p	Clock break ≥ 20 µs
t_v	Max. delay 200 ns
PFB	Power failure bit (not used and always logically LOW)

Fig. 7-23: Pulse diagram with absolute actual position value output (SSI format)

7.1.3 ET - Multi-Ethernet

Display elements

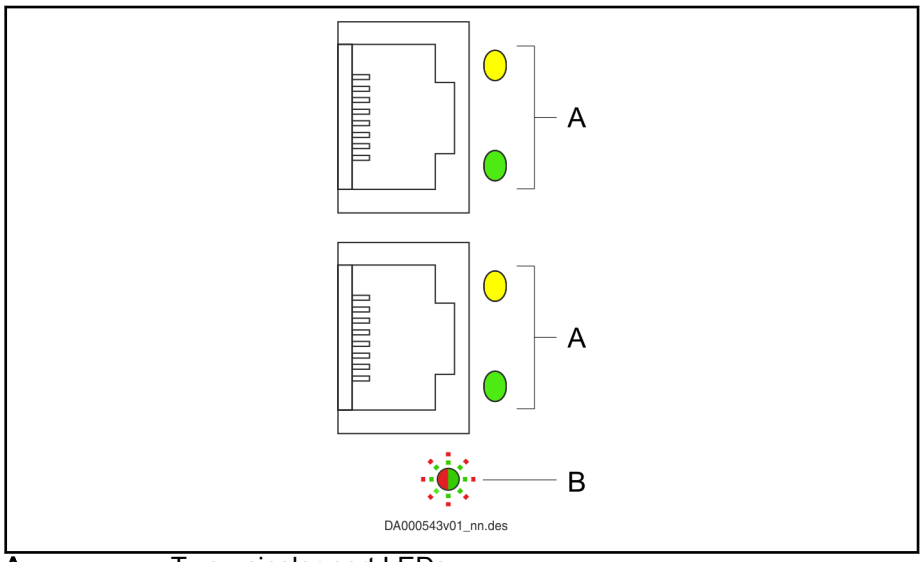

A	Two unicolor port LEDs Identification: e.g. H10, H11, H12, H13
B	Multicolor diagnostic LED Identification: e.g. H24, NET ST

Fig. 7-24: ET, display elements

The LED display depends on the field bus system.

Port LED

- chapter "EtherNet/IP" on page 208
- chapter "EtherCAT" on page 208
- chapter "sercos III" on page 208
- chapter "PROFINET IO" on page 209

Diagnostic LED

- chapter "EtherNet/IP" on page 210
- chapter "EtherCAT" on page 211
- chapter "sercos III" on page 212
- chapter "PROFINET IO" on page 213

Technical data of the components

Port LED

EtherNet/IP

LED: Color / flashing pattern	Significance
Off	No connection No data transmission
Permanently lit yellow	Data transmission running
Permanently lit green	Connection to network available

Tab. 7-14: Port LED

EtherCAT

EtherCAT has only one active LED per port.

LED: Color / flashing pattern	Significance
Off	No connection
Permanently lit green	Connection to network available, but no telegram exchange (EtherCAT bus inactive)
Flashing green	Connection to network available with telegram exchange (EtherCAT bus active)

Tab. 7-15: Port LED

sercos III

LED: Color / flashing pattern	Significance
Off	No connection No data transmission
Permanently lit yellow	Data transmission running
Permanently lit green	Connection to network available

Tab. 7-16: Port LED

PROFINET IO

LED: Color / flashing pattern	Significance
Off	No connection No data transmission
Permanently lit yellow	Data transmission running
Permanently lit green	Connection to network available

Tab. 7-17: Port LED

Technical data of the components

Diagnostic LED

EtherNet/IP

LED: Color / flashing pattern	Significance
Off	The device does not have a valid IP address or has been switched off.
Flashing green	The device has run up with a valid IP address, but does not have a cyclic connection.
Permanently lit green	The I/O connection has been established without error.
Flashing red	The existing I/O connection was unexpectedly aborted (e.g., watchdog).
Permanently lit red	The "Duplicate-IP-Adress-Check" showed that the IP address which was set already exists in the network.
Flashing red-green	The device is running up and carries out a self test.

Tab. 7-18: Diagnostic LED

EtherCAT

LED: Color / flashing pattern [1]	Significance	Description
-- Off	Status INIT	• Cyclic process data and acyclic data channel are not transmitted • No error
GN -- Flashing green	Status PRE-OPERATIONAL	Acyclic data channel is transmitted
GN -- -- -- -- -- Green, one LED lighting up	Status SAFE-OPERATIONAL	Acyclic data channel is transmitted
GN Permanently lit green	Status OPERATIONAL	Cyclic process data and acyclic data channel are transmitted
RD -- Flashing red	Configuration error	General EtherCAT configuration error
RD -- -- -- -- -- Red, one LED lighting up	Synchronization error	• The drive controller has not been synchronized to the EtherCAT master • Communication error of the drive controller
RD -- RD -- -- -- -- -- Red, two LEDs lighting up	Timeout - watchdog	• Timeout while cyclic process data are monitored • Watchdog of the EtherCAT master

1) Flashing pattern: One square corresponds to a duration of 200 ms; the arrow marks the end of a cycle; abbreviations on the squares: GN = LED permanently lit green, RD = LED permanently lit red, -- = LED is off

Tab. 7-19: Diagnostic LED

Technical data of the components

sercos III

LED: Color / flashing pattern [1]	Description	Prio [2]
-- Off	NRT mode (no sercos communication) [3]	6
OG Permanently lit orange	CP0 (communication phase 0 active)	6
GN OG OG OG OG OG OG OG OG OG OG OG Flashing orange-green	CP1 (communication phase 1 active)	6
GN OG GN OG OG OG OG OG OG OG OG OG Flashing orange-green	CP2 (communication phase 2 active)	6
GN OG GN OG GN OG OG OG OG OG OG OG Flashing orange-green	CP3 (communication phase 3 active)	6
GN Permanently lit green	CP4 (communication phase 4 active)	6
GN -- GN -- GN -- GN -- GN -- GN -- Flashing green	Transition from Fast forward to Loopback	5
RD OG RD OG RD OG RD OG RD OG RD OG Flashing red-orange	Application error (Sub-device/device error [C1D])	4
RD GN RD GN RD GN RD GN RD GN RD GN Flashing red-green	MST warning [4] (S-0-1045, sercos: Device Status [S-Dev], bit15)	3
RD Permanently lit red	Communication error (Sub-device/device error [C1D])	2
OG -- OG -- OG -- OG -- OG -- OG -- Flashing orange	Identification (S-0-1044, sercos: Device Control [C-Dev], bit15)	1
RD -- RD -- RD -- RD -- RD -- RD -- Flashing red	Internal watchdog	0

1) Flashing pattern: One square corresponds to a duration of 250 ms; the arrow marks the end of a cycle; abbreviations on the squares: GN = LED permanently lit green, OG = LED permanently lit orange, RD = LED permanently lit red, -- = LED is off

2) Display priority (1 = highest priority); the state of the highest priority is displayed

3) NRT = **N**one **R**eal **T**ime

4) MST = **M**aster **s**ynchronization **t**elegram

Tab. 7-20: Diagnostic LED

PROFINET IO

LED: Color / flashing pattern	Significance
Off	The device does not have a valid IP address or has been switched off.
Flashing green	The device has run up with a valid IP address, but does not have a cyclic connection.
Permanently lit green	The I/O connection has been established without error.
Flashing red	The existing I/O connection was unexpectedly aborted (e.g., watchdog).
Permanently lit red	The "Duplicate-IP-Adress-Check" showed that the IP address which was set already exists in the network.
Flashing red-green	The device is running up and carries out a self test.

Tab. 7-21: Diagnostic LED

Technical data of the components

7.1.4 PB - PROFIBUS

Signal Specification

Signal	Specification
+5V Repeater supply	+5 V (±10%) Max. 75 mA
Repeater control signal	TTL-compatible: • 1: Transmit • 0: Receive Output resistance: 350R V_{OL} ≤ 0.8 V at I_{OL} ≤ 2 mA V_{OH} ≥ 3.5 V at I_{OH} ≤ 1 mA
Receive/transmit data	EIA-RS485 standard

Tab. 7-22: Signal Specification

NOTICE **Danger of destroying output "+5V repeater supply" by overload!**

Do not short-circuit the output.

Do not exceed the maximum current.

Diagnostic Displays

For the significance of the diagnostic displays, see firmware documentation.

7.1.5 CN - CANopen

Display Elements CANopen

LED	Significance	Color	Description
H4	Run	Green	Signals operating states; see Functional Description of firmware
H5	Error	Red	Signals error states; see Functional Description of firmware

Tab. 7-23: Significance of Display Elements for CANopen

Main Features

Feature	CANopen
Compatibility	According to EN 50325-4
Max. possible number of nodes	127 nodes
Bus Topology	Line topology
Bus terminator (ISO 11898)	124 ohm each, 1%, 200 mW; connect at both bus ends to X61.2 and X61.7
Transmission medium	2 twisted two-wire lines (4-pin) with shield
Max. allowed bus (line) lengths	Depending on bit rate
Recommended connection cable	Our RKS number or third-party type

Tab. 7-24: Main Features

Bus Lengths Depending on Bit Rates

Bit rate [kBaud]	Max. allowed network dimension [m]
1000	25
800	50
500	100
250	250
125	500
50	1000
20	2500
10	5000

Tab. 7-25: Network Dimension

Technical data of the components

7.1.6 Sx - Safe Motion, Safe Motion Bus

Display elements

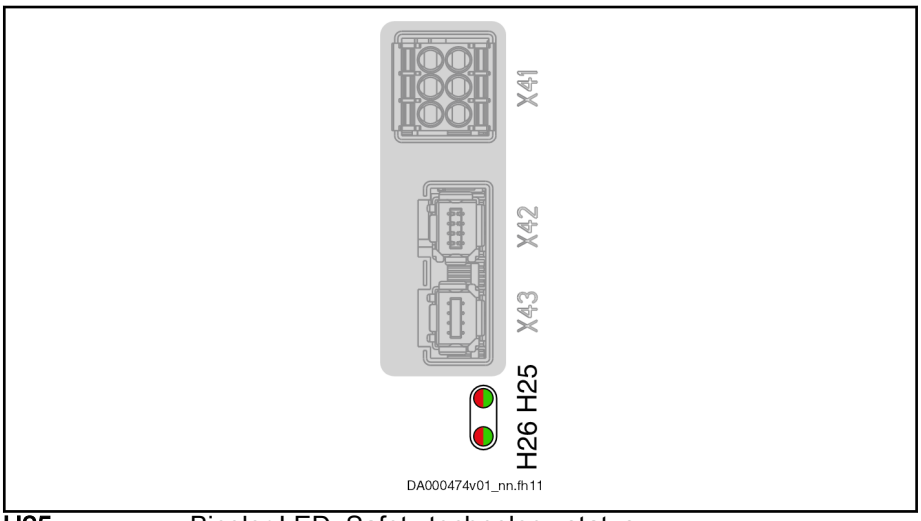

H25	Bicolor LED: Safety technology status
H26	Bicolor LED: Connection status
X41, X42, X43	Not available for "Safe Motion Bus" option

Fig. 7-25: Safe Motion, display elements

Color / flashing pattern [1]	Safety technology status [3] (Safety Supervisor State / Event)	Connection status [3]
-- Off	• Not active • Safety bus communication not configured	• Not ready • Safety bus communication not configured
GN GN -- -- Flashing green	Active, no connection (safety default)	Ready and no active connection
GN Permanently lit green	Active, at least one safe connection	Ready and at least one active connection
RD GN GN RD Flashing red-green	• Waiting for TUNID [2] • Self test and initialization • Identifying the axis identifier	• Waiting for TUNID [2] • Self test and initialization • Identifying the axis identifier
RD -- RD -- GN -- GN -- Flashing red-green	Indentifying the safety technology	-
RD -- GN -- RD -- GN -- Flashing red-green	TUNID [2] not yet set	-
RD RD -- -- Flashing red	Abortion of connections	Faulty abortion of at least one active connection
RD Permanently lit red	Critical error	Critical connection error

1) Flashing pattern: One square corresponds to a duration of 250 ms; the arrow marks the end of a cycle; abbreviations on the squares: GN = LED permanently lit green, RD = LED permanently lit red, -- = LED is off
2) TUNID = Target Unique Network Identifier
3) The LED display is only active with safety bus communication via the master communication

Tab. 7-26: LED display

Technical data of the components

7.1.7 Digital inputs/outputs

General Information

The digital inputs/outputs correspond to "IEC 61131".

☞ Do not operate digital outputs at low-resistance sources!

In the Functional Description of the firmware, observe the Notes on Commissioning for digital inputs/outputs.

Digital inputs

Digital Inputs Type A (Standard)

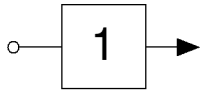

Fig. 7-26: Symbol

Data	Unit	Min.	Max.
Allowed input voltage	V	-3	30
High	V	15	30
Low	V	-3	5
Current consumption	mA	2	5
Control delay	µs		1000 + position controller clock 200 + position controller clock [1)]

1) Applies to optional I/O extension DA

Tab. 7-27: Digital Inputs Type A

Digital inputs type B (probe)

Function See "Probe" in the Functional Description of the firmware.

Technical data

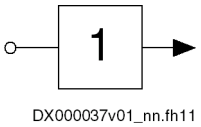

Fig. 7-27: Symbol

Data	Unit	min.	max.
Allowed input voltage	V	-3	30
High	V	15	30
Low	V	-3	5
Input current	mA	2	5
Pulse width t_{Puls}	µs	4	
Measuring accuracy t_x	µs	-1	1
Delay [1)]	µs		4 + position controller clock

1) Applies when used as a digital input. Does not apply when used as a probe.

Tab. 7-28: Digital inputs type B

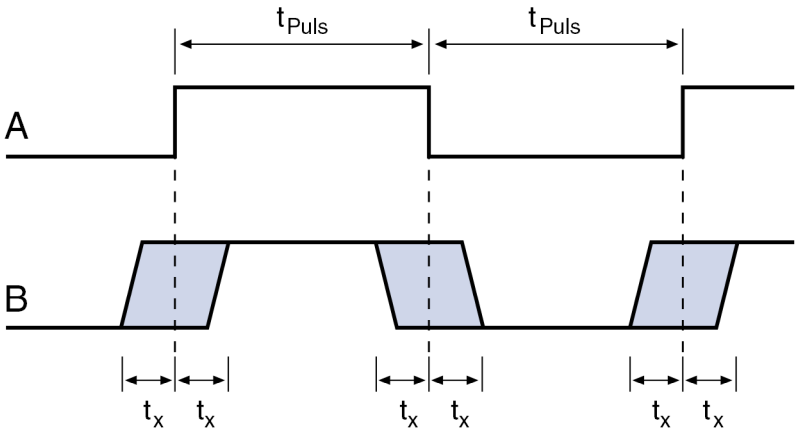

A Signal
B Signal Detection at Probe Input
t_{Puls} Pulse width
t_x Measuring accuracy of the signal edges

Fig. 7-28: Signal Detection at Probe Input

Use To acquire fast digital input signals.

☞ **Probe inputs** are "fast" inputs. For control use bounce-free switching elements (e.g. electronic switches) to avoid incorrect evaluation.

Digital inputs (safety technology L options)

The digital inputs correspond to IEC 61131, type 2.

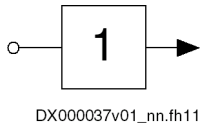

Fig. 7-29: Symbol

Data	Unit	Min.	Max.
Allowed input voltage	V	-3	30
High	V	11	30
Low	V	-3	5
Current consumption [1)]	mA	7	15

1) For KCU02, the specified values must be multiplied with the number of zone nodes of the drive line.

Tab. 7-29: Digital inputs (safety technology L options)

Digital inputs (safety technology S options)

The digital inputs correspond to IEC 61131, type 1.

Data	Unit	min.	max.
Allowed input voltage	V	-3	30
High	V	15	30
Low	V	-3	5
Current consumption	mA	2	5

Tab. 7-30: Digital inputs (safety technology S options)

Time behavior

Description	Unit	min.	max.
Test pulse width (t_{PL})	µs	0	1000
Percentage of High time ($T_{PH}/T_P \times 100\%$)	%	90	100
Phase shift between two test pulses on both channels (φ)	ms	-	-

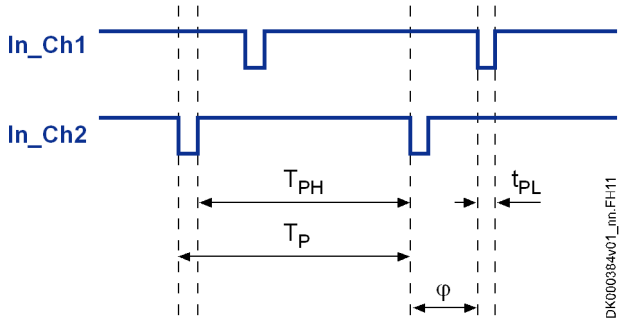

Tab. 7-31: Time behavior

Technical data of the components

Digital outputs

Digital Outputs (Standard)

The digital outputs are compatible with digital inputs of types 1, 2 and 3 (IEC 61131).

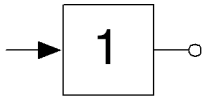

Fig. 7-30: Symbol

Data	Unit	Min.	Max.
Output voltage ON [1]	V	U_{ext} - 1	U_{ext}
Output current OFF	mA		0,05
Output current ON	mA		500
Sum of output currents [2] ■ 4 outputs ■ 8 outputs	mA		 ■ 1000 ■ 2000
Allowed energy content of connected inductive loads [3] [4] ■ f < 0.5 Hz ■ f < 2 Hz	mJ		 ■ 500 ■ 200
Control delay	µs		800 200 [5]
Short circuit protection		Present	
Overload protection		Present	

1) U_{ext}: Supply voltage
2) When several outputs supply current simultaneously, the maximum allowed total current of these outputs must be taken into account. According to the number of outputs, the total current must be related to to 4 or 8 outputs.
3) In the case of inductive loads with a greater energy content, an external free-wheeling arm must be installed. The effective terminal voltage must be < 25 V.
4) The maximum energy content depends on the switching frequency f of the outputs
5) Applies to optional I/O extension DA

Tab. 7-32: Digital Outputs

☞
- The digital outputs have been realized with high-side switches. This means that these outputs only can actively supply current.
- The energy absorption capacity of the outputs is used to limit voltage peaks caused when inductive loads are switched off.

  Limit voltage peaks by using free-wheeling diodes directly at the relay coil.

Digital Outputs (Safety Technology L Options)

The digital outputs are compatible with digital inputs of types 1, 2 and 3 (IEC 61131).

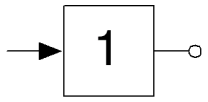

Fig. 7-31: Symbol

Data	Unit	Min.	Max.
Supply voltage (U_{ext})	V	19,2	30
Current consumption (I_{ext})	mA		700
Output voltage ON	V	18,2	30
Output voltage OFF	V		5
Output current ON	mA		350
Allowed energy content of connected inductive loads, e.g. relay coils; only allowed as single pulse	mJ		400
Short circuit protection		Available	
Overload protection		Available	

Tab. 7-33: Digital Outputs (Safety Technology L Options)

Digital outputs (safety technology S options)

The digital outputs are compatible with digital inputs of types 1, 2 and 3 (IEC 61131).

Data	Unit	min.	max.
Output voltage ON	V	U_{ext} - 1	U_{ext}
Output voltage OFF	V		2
Allowed output current per output	mA		350
Allowed energy content of connected inductive loads, e.g. relay coils	mJ		400 [1) 2)]
Capacitive load	nF		320
Short circuit protection		Present	
Overload protection		Present	
Block diagram output:	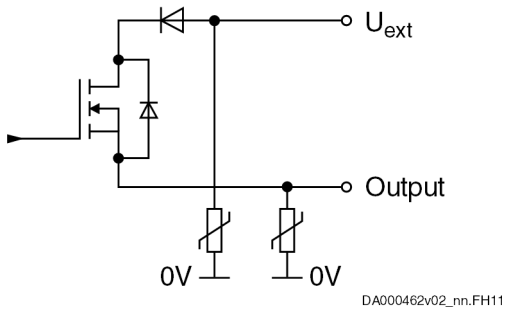		
Error detection	The following errors are detected: • Wiring error with short circuit to high • Wiring error with short circuit to low • Wiring error with short circuit between the two channels • Internal errors In the case of an error, the control panel shows the corresponding error message: F83xx		

1) At a maximum switching frequency of 1 Hz

2) In the case of inductive loads with currents > 200 mA or in the case of inductive loads with a greater energy content, an external free-wheeling arm has to be installed. The effective terminal voltage has to be < 25 V.

Tab. 7-34: Digital outputs

Time behavior

Description	Unit	min.	max.
Test pulse width (t_{PL})	µs	100	200
Periodic time (T_P)	ms	500	1000
Phase shift between two test pulses on both channels (φ)	ms	50	-

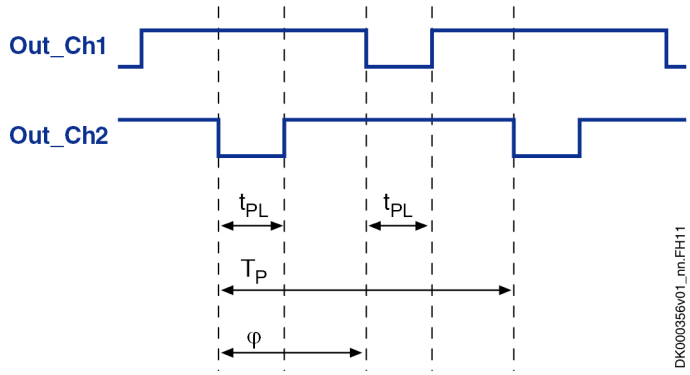

Tab. 7-35: Time behavior

7.1.8 Analog Voltage Input

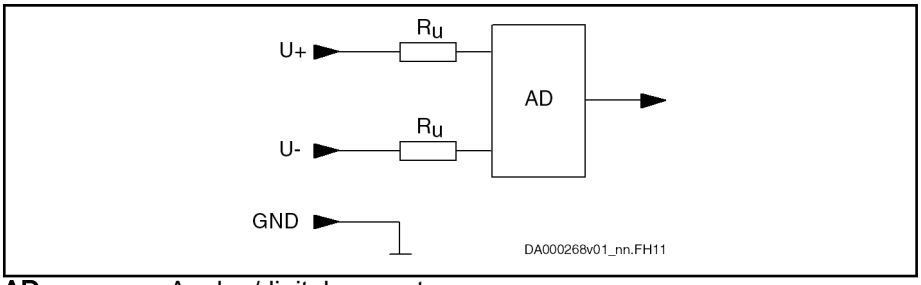

AD Analog/digital converter

Fig. 7-32: Analog Voltage Input

Data	Unit	Min.	Typ.	Max.
Allowed input voltage	V	-30		+30
Working range input voltage U_{on_work}	V	-10		+10
Input resistance R_u	kΩ	150		300
Input bandwidth (-3 dB)	kHz		1,3	
Common-mode range	V	-30		+30
Common-mode rejection	dB	50		
Relative measuring error at 90% U_{on_work}	%	-1		+1
Resolution	Bit		14 [1)] 13 [2)]	
Cables		For cable lengths **> 30 m**, only use **shielded** cables.		

1) Applies to: Cxx02 control sections (X32), optional I/O extension DA (X38), HCS01 drive controllers (X32)

2) Applies to: Control sections with extended scope CSx02.1B (X35), CDB02.1B (X36)

Tab. 7-36: Analog Voltage Input

7.1.9 Analog current input

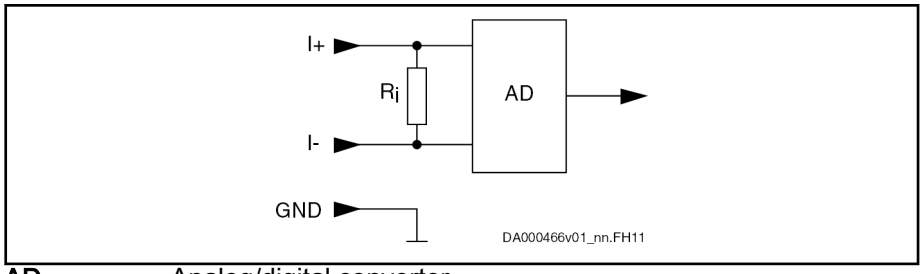

AD Analog/digital converter

Fig. 7-33: Analog current input

Electrical data (current inputs [-20/4 … 20 mA])

Spring terminal (connector)	Unit	min.	max.
Input current measuring range[1)]	mA	-20 / 4	20
Input current minimum value monitoring[2)]	mA	2	3
Input current maximum value monitoring[3)]	mA	21	22
Input resistance	Ω	280	
Input bandwidth (-3db)	kHz	1.3	
Relative measuring error at 18 mA	%	-1	+1
Resolution	-	13bit (12bit + 4-fold oversampling)[5)] 12bit (11bit + 4-fold oversampling)[6)]	
Overload protection[4)]	-	Present	
Wiring	-	Only use **shielded** cables for cable lengths **> 30 m**.	

1) Measuring range (-20 … 20 or 4 … 20) can be set using a parameter. With a measuring range 4 … 20, the minimum value monitoring (wire break) is automatically active.
2) Only possible with a measuring range 4 … 20
3) Monitoring switched off at approx. ±35 mA
4) In the case of input currents greater than the maximum value, an error is signaled and the input is switched at high resistance
5) Applies to: Optional I/O extension DA (X38)
6) Applies to: Control sections with extended scope CSx02.1B (X35), CDB02.1B (X36)

Tab. 7-37: Electrical data

Technical data of the components

7.1.10 Analog Output

Data	Unit	min	Typ.	max
Output voltage	V	-10		+10
Output load, ohmic	kΩ	2		
Output load, capacitive	nF			100
Resolution	mV/incr	24		
Conversion time (incl. response time)	µs			750 250 1)
Output clock		Position controller clock		
Precision (in relation to the measuring range)		±0.5% with load ≥ 10 kΩ ±1% with load ≥ 2 kΩ		
Short circuit protection		Present		
Overload protection		Present		

1) Applies to optional I/O extension DA

Tab. 7-38: Analog Output

7.1.11 Relay contacts

Relay Contact Type 2

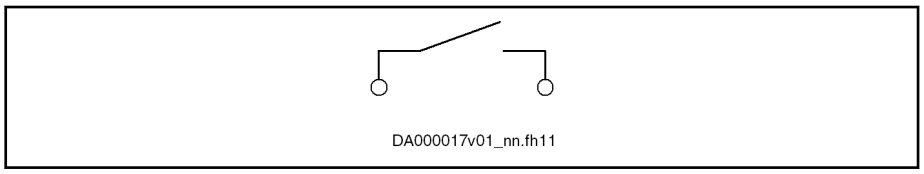

Fig. 7-34: Relay contact

Data	Unit	Min.	Typ.	Max.
Current carrying capacity	mA	10		1000
Voltage load capacity	V			30
Contact resistance at minimum current	mΩ			1000
Switching actions at max. time constant of load			1×10^6	
Number of mechanical switching cycles			1×10^8	
Time constant of load	ms	ohmic		
Pick up delay	ms			10
Drop out delay	ms			10

Tab. 7-39: Relay Contacts Type 2

7.2 Control panel

7.2.1 Design

Standard control panel HAP01.1N

For a detailed description of the control panel, see the documentation "Application Manual, Functions" of the firmware used.

Fig. 7-35: Standard control panel HAP01.1N

Description

The standard control panel

- has a single-line display
- must have been plugged in when the drive controller is switched on so that it can be recognized (not suited for hot plug)
- can be used as programming module
- The **display** shows operating states, command and error diagnoses and pending warnings.
- Using the four **keys**, the commissioning engineer or service technician can have extended diagnoses displayed and trigger simple commands.
- Memory
  - 400 kbytes for MLD boot program
  - 492 bytes for MLD retain variables

ADVANCED Control Panel HAP01.1A

☞ For a detailed description of the control panel, see the documentation "Application Manual, Functions" of the firmware used.

Fig. 7-36: ADVANCED Control Panel HAP01.1A

Description

The ADVANCED control panel HAP01.1A

- has a slot for a **microSD memory card (PFM04.1)**
- has a single-line display
- is suited for hot plug
- can be used as programming module
- The **display** shows operating states, command and error diagnoses and pending warnings.
- Using the four **keys**, the commissioning engineer or service technician can have extended diagnoses displayed and trigger simple commands.
- Memory:
  - 2 MB (data, flash memory)
  - 16 MB (code, flash memory)
  - 32 kB (retain data, FRAM memory)

Technical data of the components

7.3 Power section

7.3.1 Control voltage

Control voltage supply data

Description	Symbol	Unit	HCS01.1E-W0003-_-02	HCS01.1E-W0006-_-02	HCS01.1E-W0009-_-02	HCS01.1E-W0013-_-02	HCS01.1E-W0018-_-02
Control voltage input[1)]	U_{N3}	V	24 ± 20%				
	U_{N3}	V	24 ± 5%				
Control voltage when using motor holding brake with motor cable length > 50 m[3)]	U_{N3}	V	26 ± 5%				
Max. inrush current at 24 V supply	I_{IN3_max}	A	3.30				
Pulse width of I_{EIN3}	$t_{EIN3Lade}$	ms	2				
Input capacitance	C_{N3}	mF	0.04				
Rated power consumption control voltage input at U_{N3}[4)]	P_{N3}	W	27		28		34
Last modification: 2012-01-23							

1) 2) 3) Observe supply voltage for motor holding brakes
4) See information on "Rated power consumption control voltage input at U_{N3}"

Tab. 7-40: HCS - Control voltage supply data

Rated power consumption control voltage input at U_{N3}

Including control section, plus safety option

Control voltage supply data

Description	Symbol	Unit	HCS01.1E-W0005-_-03	HCS01.1E-W0008-_-03	HCS01.1E-W0018-_-03	HCS01.1E-W0028-_-03	HCS01.1E-W0054-_-03
Control voltage input[1)]	U_{N3}	V	24 ± 20%				
	U_{N3}	V	24 ± 5%				
Control voltage when using motor holding brake with motor cable length > 50 m[3)]	U_{N3}	V	26 ± 5%				
Max. inrush current at 24 V supply	I_{IN3_max}	A	3.30				4.50
Pulse width of I_{EIN3}	$t_{EIN3Lade}$	ms	2				
Last modification: 2012-01-23							

Description	Symbol	Unit	HCS01.1E -W0005- _-03	HCS01.1E -W0008- _-03	HCS01.1E -W0018- _-03	HCS01.1E -W0028- _-03	HCS01.1E -W0054- _-03
Input capacitance	C_{N3}	mF	0.04				0.06
Rated power consumption control voltage input at U_{N3} 4)	P_{N3}	W	27	28	34		45
Last modification: 2012-01-23							

1) 2) 3) Observe supply voltage for motor holding brakes
4) See information on "Rated power consumption control voltage input at U_{N3}"

Tab. 7-41: HCS - Control voltage supply data

Rated power consumption control voltage input at U_{N3}

Including control section, plus safety option

Overvoltage

Overvoltage greater than 33 V has to be discharged by means of the appropriate electrical equipment of the machine or installation.

This includes:

- 24V power supply units that reduce incoming overvoltage to the allowed value.
- Overvoltage limiters at the control cabinet input that limit existing overvoltage to the allowed value. This, too, applies to long 24V lines that have been run in parallel to power cables and mains cables and can absorb overvoltage by inductive or capacitive coupling.

7.3.2 Mains voltage

Mains voltage supply data

Description	Symbol	Unit	HCS01.1E -W0003- _-02	HCS01.1E -W0006- _-02	HCS01.1E -W0009- _-02	HCS01.1E -W0013- _-02	HCS01.1E -W0018- _-02
Mains frequency	f_{LN}	Hz	50...60				
Mains frequency tolerance		Hz	± 2				
Maximum allowed mains frequency change	$\Delta f_{LN}/\Delta t$	Hz/s	2				
Rotary field condition			None				
Short circuit current rating	SCCR	A rms	42000				
Nominal mains voltage	U_{LN_nenn}	V	3 AC 230				
Single-phase mains voltage	U_{LN}	V	110...230				
Three-phase mains voltage at TN-S, TN-C, TT mains	U_{LN}	V	110...230				
Last modification: 2012-06-28							

Technical data of the components

Description	Symbol	Unit	HCS01.1E-W0003-_-02	HCS01.1E-W0006-_-02	HCS01.1E-W0009-_-02	HCS01.1E-W0013-_-02	HCS01.1E-W0018-_-02
Three-phase mains voltage at IT mains[1)]	U_{LN}	V	110...230				
Three-phase mains voltage at Corner-grounded-Delta mains[2)]	U_{LN}	V	110...230				
Tolerance rated input voltage U_{LN}		%	± 10				
Minimum short circuit power of the mains for failure-free operation	S_{k_min}	MVA	0.02	0.03	0.05	0.1	0.2
Minimum inductance of mains supply (mains phase inductance)[3)]	L_{min}	µH	40				
Assigned type of mains choke			-				
Inrush current	$I_{L\_trans\_max\_on}$	A	See figure				
Maximum allowed ON-OFF cycles per minute[4)]			1				
Mains input continuous current at U_{LN_nenn} and P_{DC_cont} (single-phase, without mains choke)[5)]	I_{LN}	A	1.80	2.80	5.00	8.30	12.80
Mains input continuous current at U_{LN_nenn} and P_{DC_cont} (three-phase, without mains choke)[6)]	I_{LN}	A	0.60	1.20	2.30	4.50	9.60
Mains input continuous current at U_{LN_nenn} and P_{DC_cont} (single-phase, with mains choke)[7)]	I_{LN}	A	-				
Mains input continuous current at U_{LN_nenn} and P_{DC_cont} (three-phase, with mains choke)[8)]	I_{LN}	A	-				
Nominal current AC1 for mains contactor at nom. data			ILN				
Mains fuse according to EN 60204-1 (single-phase, without mains choke)		A	4;gG		6;gG	10;gG	16;gG
Mains fuse according to EN 60204-1 (three-phase, without mains choke)		A	2;gG		4;gG	6;gG	16;gG
Mains fuse according to EN 60204-1 (single-phase, with mains choke)		A	-				
Mains fuse according to EN 60204-1 (three-phase, with mains choke)		A	-				
Last modification: 2012-06-28							

Technical data of the components

Description	Symbol	Unit	HCS01.1E-W0003-_-02	HCS01.1E-W0006-_-02	HCS01.1E-W0009-_-02	HCS01.1E-W0013-_-02	HCS01.1E-W0018-_-02
Required wire size in accordance with NFPA 79 and UL 508 A (internal wiring);[9]	A_{LN}	AWG	14 AWG				
Mains connection power at U_{LN_nenn} and P_{DC_cont} (three-phase, without mains choke)	S_{LN}	kVA	0.30	0.53	0.92	1.55	3.52
Mains connection power at U_{LN_nenn} and P_{DC_cont} (three-phase, with mains choke)	S_{LN}	kVA	-				
Mains connection power at U_{LN_nenn} and P_{DC_cont} (single-phase, without mains choke)	S_{LN}	kVA	tbd				
Mains connection power at U_{LN_nenn} and P_{DC_cont} (single-phase, with mains choke)	S_{LN}	kVA	-				
Power factor TPF (λ_L) at U_{LN_nenn} and P_{DC_cont} (single-phase, without mains choke)[10]	TPF		0.29	0.32	0.35	0.37	0.49
Power factor TPF (λ_L) at U_{LN_nenn} and P_{DC_cont} (three-phase, without mains choke)[11]	TPF		0.47		0.52	0.56	0.52
Power factor TPF (λ_L) at U_{LN_nenn} and P_{DC_cont} (single-phase, with mains choke)[12]	TPF		-				
Power factor TPF (λ_L) at U_{LN_nenn} and P_{DC_cont} (three-phase, with mains choke)[13]	TPF		-				
Power factor TPF (λ_L) at U_{LN_nenn} and 10% P_{DC_cont} (single-phase, without mains choke)	$TPF_{10\%}$		tbd				
Power factor TPF (λ_L) at U_{LN_nenn} and 10% P_{DC_cont} (three-phase, without mains choke)	$TPF_{10\%}$		0.28	0.33	0.38	0.40	0.37
Power factor TPF (λ_L) at U_{LN_nenn} and 10% P_{DC_cont} (single-phase, with mains choke)	$TPF_{10\%}$		-				
Power factor TPF (λ_L) at U_{LN_nenn} and 10% P_{DC_cont} (three-phase, with mains choke)	$TPF_{10\%}$		-				
Power factor of fundamental component DPF at P_{DC_cont} (single-phase, without mains choke)	$\cos\varphi^{h1}$		tbd				
Last modification: 2012-06-28							

Technical data of the components

Description	Symbol	Unit	HCS01.1E -W0003- _-02	HCS01.1E -W0006- _-02	HCS01.1E -W0009- _-02	HCS01.1E -W0013- _-02	HCS01.1E -W0018- _-02
Power factor of fundamental component DPF at P_{DC_cont} (three-phase, without mains choke)	$\cos\varphi^{h1}$		0.99				
Power factor of fundamental component DPF at P_{DC_cont} (single-phase, with mains choke)	$\cos\varphi^{h1}$		-				
Power factor of fundamental component DPF at P_{DC_cont} (three-phase, with mains choke)	$\cos\varphi^{h1}$		-				
Last modification: 2012-06-28							

1) 2)	Mains voltage > U_{LN}: Use a transformer with grounded neutral point, do not use autotransformers!
3)	Otherwise use HNL mains choke
4)	Maximum allowed number of switch-on processes: 250000
5) 6) 7) 8) 10) 11) 12) 13)	Find interim values by interpolation
9)	Copper wire; PVC-insulation (conductor temperature 90 °C; T_a ≤ 40 °C) in accordance with NFPA 79 chapter 12 and UL 508A chapter 28

Tab. 7-42: HCS - Mains voltage supply data

Mains voltage supply data

Description	Symbol	Unit	HCS01.1E -W0005- _-03	HCS01.1E -W0008- _-03	HCS01.1E -W0018- _-03	HCS01.1E -W0028- _-03	HCS01.1E -W0054- _-03
Mains frequency	f_{LN}	Hz	50...60				
Mains frequency tolerance		Hz	± 2				
Maximum allowed mains frequency change	$\Delta f_{LN}/\Delta t$	Hz/s	2				
Rotary field condition			None				
Short circuit current rating	SCCR	A rms	42000				
Nominal mains voltage	U_{LN_nenn}	V	3 AC 400				
Single-phase mains voltage	U_{LN}	V	Not allowed				
Three-phase mains voltage at TN-S, TN-C, TT mains	U_{LN}	V	200...500				
Three-phase mains voltage at IT mains[1)]	U_{LN}	V	200...230				
Three-phase mains voltage at Corner-grounded-Delta mains[2)]	U_{LN}	V	200...230				
Tolerance rated input voltage U_{LN}		%	± 10				
Last modification: 2012-06-28							

Technical data of the components

Description	Symbol	Unit	HCS01.1E-W0005-_-03	HCS01.1E-W0008-_-03	HCS01.1E-W0018-_-03	HCS01.1E-W0028-_-03	HCS01.1E-W0054-_-03
Minimum short circuit power of the mains for failure-free operation	S_{k_min}	MVA	0.05	0.1	0.2	0.3	0.9
Minimum inductance of mains supply (mains phase inductance)[3]	L_{min}	µH	40				
Assigned type of mains choke			-			HNL01.1E-1000-N0012-A-500-NNNN	HNL01.1E-0600-N0032-A-500-NNNN
Inrush current	$I_{L\_trans\_max\_on}$	A	See figure				
Maximum allowed ON-OFF cycles per minute[4]			1				
Mains input continuous current at U_{LN_nenn} and P_{DC_cont} (single-phase, without mains choke)[5]	I_{LN}	A	-				
Mains input continuous current at U_{LN_nenn} and P_{DC_cont} (three-phase, without mains choke)[6]	I_{LN}	A	1.50	2.50	5.00	8.00	25.00
Mains input continuous current at U_{LN_nenn} and P_{DC_cont} (single-phase, with mains choke)[7]	I_{LN}	A	-				
Mains input continuous current at U_{LN_nenn} and P_{DC_cont} (three-phase, with mains choke)[8]	I_{LN}	A	-		tbd	10.00	28.00
Nominal current AC1 for mains contactor at nom. data			ILN				
Mains fuse according to EN 60204-1 (single-phase, without mains choke)		A	-				
Mains fuse according to EN 60204-1 (three-phase, without mains choke)		A	2;gG	4;gG	6;gG	10;gG	32;gG
Mains fuse according to EN 60204-1 (single-phase, with mains choke)		A	-				
Mains fuse according to EN 60204-1 (three-phase, with mains choke)		A	-		tbd	16;gG	32;gG
Required wire size in accordance with NFPA 79 and UL 508 A (internal wiring);[9]	A_{LN}	AWG	14 AWG				10 AWG
Last modification: 2012-06-28							

Technical data of the components

Description	Symbol	Unit	HCS01.1E-W0005-_-03	HCS01.1E-W0008-_-03	HCS01.1E-W0018-_-03	HCS01.1E-W0028-_-03	HCS01.1E-W0054-_-03
Mains connection power at U_{LN_nenn} and P_{DC_cont} (three-phase, without mains choke)	S_{LN}	kVA	1.00	1.54	3.50	4.90	16.00
Mains connection power at U_{LN_nenn} and P_{DC_cont} (three-phase, with mains choke)	S_{LN}	kVA	-		tbd	5.50	18.00
Mains connection power at U_{LN_nenn} and P_{DC_cont} (single-phase, without mains choke)	S_{LN}	kVA	-				
Mains connection power at U_{LN_nenn} and P_{DC_cont} (single-phase, with mains choke)	S_{LN}	kVA	-				
Power factor TPF (λ_L) at U_{LN_nenn} and P_{DC_cont} (single-phase, without mains choke)[10)]	TPF		-				
Power factor TPF (λ_L) at U_{LN_nenn} and P_{DC_cont} (three-phase, without mains choke)[11)]	TPF		0.49	0.56	0.52	0.53	0.56
Power factor TPF (λ_L) at U_{LN_nenn} and P_{DC_cont} (single-phase, with mains choke)[12)]	TPF		-				
Power factor TPF (λ_L) at U_{LN_nenn} and P_{DC_cont} (three-phase, with mains choke)[13)]	TPF		-		tbd	0.72	0.78
Power factor TPF (λ_L) at U_{LN_nenn} and 10% P_{DC_cont} (single-phase, without mains choke)	$TPF_{10\%}$		-				
Power factor TPF (λ_L) at U_{LN_nenn} and 10% P_{DC_cont} (three-phase, without mains choke)	$TPF_{10\%}$		0.30	0.35	0.38	0.40	0.45
Power factor TPF (λ_L) at U_{LN_nenn} and 10% P_{DC_cont} (single-phase, with mains choke)	$TPF_{10\%}$		-				
Power factor TPF (λ_L) at U_{LN_nenn} and 10% P_{DC_cont} (three-phase, with mains choke)	$TPF_{10\%}$		-		tbd		
Power factor of fundamental component DPF at P_{DC_cont} (single-phase, without mains choke)	$\cos\varphi^{h1}$		-				
Power factor of fundamental component DPF at P_{DC_cont} (three-phase, without mains choke)	$\cos\varphi^{h1}$		0.99	0.98	0.99	0.98	0.97
Last modification: 2012-06-28							

Description	Symbol	Unit	HCS01.1E -W0005- _-03	HCS01.1E -W0008- _-03	HCS01.1E -W0018- _-03	HCS01.1E -W0028- _-03	HCS01.1E -W0054- _-03
Power factor of fundamental component DPF at P_{DC_cont} (single-phase, with mains choke)	$\cos\varphi^{h1}$		-				
Power factor of fundamental component DPF at P_{DC_cont} (three-phase, with mains choke)	$\cos\varphi^{h1}$		-		tbd	0.99	0.95
Last modification: 2012-06-28							

1) 2)	Mains voltage > U_{LN}: Use a transformer with grounded neutral point, do not use autotransformers!
3)	Otherwise use HNL mains choke
4)	Maximum allowed number of switch-on processes: 250000
5) 6) 7) 8) 10) 11) 12) 13)	Find interim values by interpolation
9)	Copper wire; PVC-insulation (conductor temperature 90 °C; $T_a \leq 40$ °C) in accordance with NFPA 79 chapter 12 and UL 508A chapter 28

Tab. 7-43: HCS - Mains voltage supply data

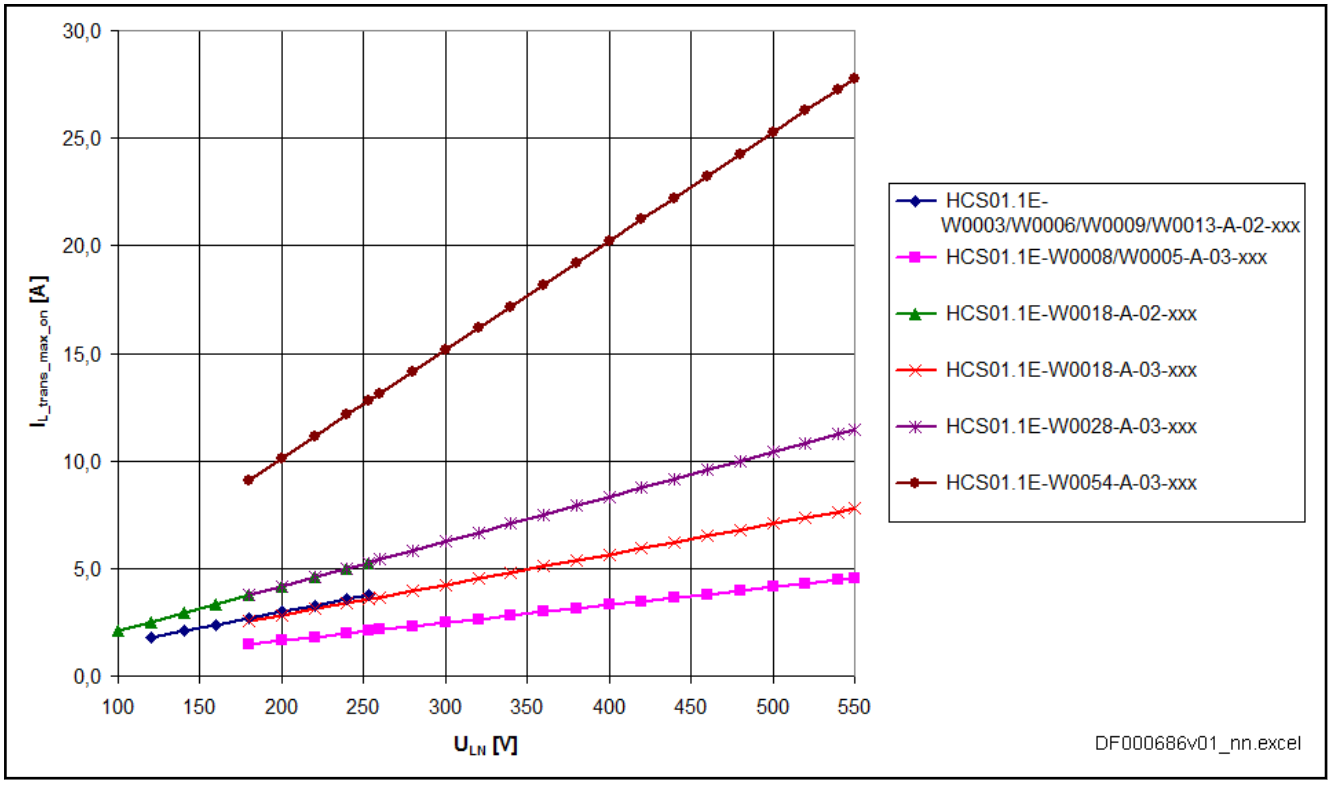

$I_{L\_trans\_max\_on}$	Maximum inrush current
U_{LN}	Mains voltage

Fig. 7-37: Maximum inrush current vs. Mains voltage

Technical data of the components

7.3.3 DC bus

Power section data - DC bus

Description	Symbol	Unit	HCS01.1E-W0003-_-02	HCS01.1E-W0006-_-02	HCS01.1E-W0009-_-02	HCS01.1E-W0013-_-02	HCS01.1E-W0018-_-02
DC bus voltage	U_{DC}	V	U_{LN} x 1.41				
Capacitance in DC bus	C_{DC}	mF	0.44		0.78		1.20
DC resistance in DC bus (L+ to L-)	R_{DC}	kOhm	663.00				61.20
Rated power (t > 10 min) at f_s = 4 kHz; U_{LN_nenn}; control factor a_0 > 0.8; with mains choke	P_{DC_cont}	kW	-				
Rated power (t > 10 min) at f_s = 4 kHz; U_{LN_nenn}; control factor a_0 > 0.8; without mains choke	P_{DC_cont}	kW	0.15	0.25	0.46	0.80	1.80
Factor to reduce P_{DC_cont} at single-phase mains voltage	f_{1_3ph}		1.00			0.80	0.70
P_{DC_cont} and P_{DC_max} vs. mains input voltage; $U_{LN} \leq U_{LN\_nenn}$		%/V	$P_{DC\_cont\ (ULN)} = P_{DC\_cont}$ x [1 - (230 - U_{LN}) x 0.0025]				
P_{DC_cont} and P_{DC_max} vs. mains input voltage; $U_{LN} > U_{LN\_nenn}$		%/V	No power increase				
Maximum allowed DC bus power at U_{LN_nenn}; with mains choke	P_{DC_max}	kW	-				
Maximum allowed DC bus power at U_{LN_nenn}; without mains choke	P_{DC_max}	kW	0.45	0.75	1.38	2.40	4.80
Balancing factor for P_{DC_cont} (for parallel operation at common DC bus) with mains choke			-				
Balancing factor for P_{DC_cont} (for parallel operation at common DC bus) without mains choke			-				
Monitoring value maximum DC bus voltage, switch-off threshold	$U_{DC\_limit\_max}$	V	420				
Monitoring value minimum DC bus voltage, undervoltage threshold	$U_{DC\_limit\_min}$	V	0.75 x U_{LN} or "P-0-0114, Undervoltage threshold", if P-0-0114 > 0.75 x U_{LN}				
Charging resistor continuous power	P_{DC_Start}	kW	0.03				0.15
Last modification: 2012-05-16							

Description	Symbol	Unit	HCS01.1E-W0003-_-02	HCS01.1E-W0006-_-02	HCS01.1E-W0009-_-02	HCS01.1E-W0013-_-02	HCS01.1E-W0018-_-02
Allowed external DC bus capacitance (nom.) at U_{LN_nenn} 1)	C_{DCext}	mF	-				
Charging time at maximum allowed C_{DCext} external DC bus capacitance at U_{LN_nenn}	$t_{lade\_DC\_Cext}$	s	2.50				
Last modification: 2012-05-16							

1) Use assigned mains choke

Tab. 7-44: HCS - Power section data - DC bus

Power section data - DC bus

Description	Symbol	Unit	HCS01.1E-W0005-_-03	HCS01.1E-W0008-_-03	HCS01.1E-W0018-_-03	HCS01.1E-W0028-_-03	HCS01.1E-W0054-_-03
DC bus voltage	U_{DC}	V	ULN x 1.41				
Capacitance in DC bus	C_{DC}	mF	0.11		0.39		0.78
DC resistance in DC bus (L+ to L-)	R_{DC}	kOhm	320.00		230.00		136.00
Rated power (t > 10 min) at f_s = 4 kHz; U_{LN_nenn}; control factor a_0 > 0.8; with mains choke	P_{DC_cont}	kW	-		tbd	4.00	14.00
Rated power (t > 10 min) at f_s = 4 kHz; U_{LN_nenn}; control factor a_0 > 0.8; without mains choke	P_{DC_cont}	kW	0.46	0.86	1.70	2.60	9.00
Factor to reduce P_{DC_cont} at single-phase mains voltage	f_{1_3ph}		1-phase operation not allowed				
P_{DC_cont} and P_{DC_max} vs. mains input voltage; $U_{LN} \leq U_{LN\_nenn}$		%/V	$P_{DC\_cont\,(ULN)} = P_{DC\_cont} \times [1 - (400 - U_{LN}) \times 0.0025]$				
P_{DC_cont} and P_{DC_max} vs. mains input voltage; $U_{LN} > U_{LN\_nenn}$		%/V	No power increase				
Maximum allowed DC bus power at U_{LN_nenn}; with mains choke	P_{DC_max}	kW	-			9.70	19.00
Maximum allowed DC bus power at U_{LN_nenn}; without mains choke	P_{DC_max}	kW	1.38	2.58	5.10	6.20	14.00
Balancing factor for P_{DC_cont} (for parallel operation at common DC bus) with mains choke			-			0.80	
Balancing factor for P_{DC_cont} (for parallel operation at common DC bus) without mains choke			-			0.50	
Monitoring value maximum DC bus voltage, switch-off threshold	$U_{DC\_limit\_max}$	V	900				
Last modification: 2014-12-19							

Technical data of the components

Description	Symbol	Unit	HCS01.1E-W0005-_-03	HCS01.1E-W0008-_-03	HCS01.1E-W0018-_-03	HCS01.1E-W0028-_-03	HCS01.1E-W0054-_-03
Monitoring value minimum DC bus voltage, undervoltage threshold	$U_{DC\_limit\_min}$	V	0.75 x U_{LN} or "P-0-0114, Undervoltage threshold", if P-0-0114 > 0.75 x U_{LN}				
Charging resistor continuous power	P_{DC_Start}	kW	0.03		0.05	0.15	0.50
Allowed external DC bus capacitance (nom.) at U_{LN_nenn} 1)	C_{DCext}	mF	-		3.00	4.00	13.00
Charging time at maximum allowed C_{DCext} external DC bus capacitance at U_{LN_nenn}	$t_{lade\_DC\_Cext}$	s	2.50				
Last modification: 2014-12-19							

1) Use assigned mains choke

Tab. 7-45: HCS - Power section data - DC bus

7.3.4 Integrated braking resistor

☞ Information on the external braking resistor: See chapter 8.3.4 "External braking resistors HLR" on page 301.

Integrated braking resistor data

Description	Symbol	Unit	HCS01.1E-W0003-_-02	HCS01.1E-W0006-_-02	HCS01.1E-W0009-_-02	HCS01.1E-W0013-_-02	HCS01.1E-W0018-_-02
Braking resistor continuous power	P_{BD}	kW	0.02			0.03	0.15
Braking resistor peak power	P_{BS}	kW	1.68				2.24
Nominal braking resistor	$R_{DC\_Bleeder}$	ohm	100				68
Braking resistor switch-on threshold - independent of mains voltage 1)	$U_{R\_DC\_On\_f}$	V	390				
Braking resistor switch-on threshold - depending on mains voltage 2)	$U_{R\_DC\_On\_v}$		-				
Maximum allowed on-time duty	t_{on_max}	s	0.20				1.34
Minimum allowed cycle time	T_{cycl}	s	16.80		11.20		20.00
Regenerative power to be absorbed	W_{R_max}	kWs	0.40				3.00
Balancing factor for P_{BD} (for parallel operation at common DC bus)	f		-				
Cooling of integrated braking resistor			Natural convection			Forced ventilation	
Last modification: 2012-05-16							

1) 2) Factory setting

Tab. 7-46: HCS - Integrated braking resistor data

Integrated braking resistor data

Description	Symbol	Unit	HCS01.1E-W0005-_-03	HCS01.1E-W0008-_-03	HCS01.1E-W0018-_-03	HCS01.1E-W0028-_-03	HCS01.1E-W0054-_-03
Braking resistor continuous power	P_{BD}	kW	0.02	0.03	0.05	0.15	0.50
Braking resistor peak power	P_{BS}	kW	4.00		7.20	10.60	25.80
Nominal braking resistor	$R_{DC\_Bleeder}$	ohm	180		100	68	28
Braking resistor switch-on threshold - independent of mains voltage[1)]	$U_{R\_DC\_On\_f}$	V	820				
Braking resistor switch-on threshold - depending on mains voltage[2)]	$U_{R\_DC\_On\_v}$		130% of parameter P-0-0815, 820V at most				
Maximum allowed on-time duty	t_{on_max}	s	0.20		0.32	0.28	0.50
Minimum allowed cycle time	T_{cycl}	s	40.00	26.70	45.40	20.00	26.00
Regenerative power to be absorbed	W_{R_max}	kWs	0.80		2.25	3.00	13.00
Balancing factor for P_{BD} (for parallel operation at common DC bus)	f		0.80				
Cooling of integrated braking resistor			Forced ventilation				
							Last modification: 2012-05-16

1) 2) Factory setting

Tab. 7-47: HCS - Integrated braking resistor data

7.3.5 Inverter

Power section data - inverter

Description	Symbol	Unit	HCS01.1E-W0003-_-02	HCS01.1E-W0006-_-02	HCS01.1E-W0009-_-02	HCS01.1E-W0013-_-02	HCS01.1E-W0018-_-02
Allowed switching frequencies[1)]	f_s	kHz	4, 8, 12, 16				
Output voltage, fundamental wave for V/Hz (U/f) control	V_{out_eff}	V	~UDC x 0.71				
Output voltage, fundamental wave for closed-loop operation	V_{out_eff}	V	~UDC x 0.71				
Rise of voltage at output with U_{LN_nenn} and 15 m motor cable length phase-phase (10-90%)[2)]	dv/dt	kV/µs	5.00				
Rise of voltage at output with U_{LN_nenn} and 15 m motor cable length phase-ground (10-90%)[3)]	dv/dt	kV/µs	5.00				
							Last modification: 2015-06-12

Technical data of the components

Description	Symbol	Unit	HCS01.1E-W0003-_-02	HCS01.1E-W0006-_-02	HCS01.1E-W0009-_-02	HCS01.1E-W0013-_-02	HCS01.1E-W0018-_-02
Output frequency range when f_s = 4 kHz	f_{out_4k}	Hz	0...400				
Output frequency range when f_s = 8 kHz	f_{out_8k}	Hz	0...800				
Output frequency range when f_s = 12 kHz	f_{out_12k}	Hz	0...1200				
Output frequency range when f_s = 16 kHz	f_{out_16k}	Hz	0...1600				
Output frequency threshold for detecting motor standstill[4)]	f_{out_still}	Hz	4				
Maximum output current when f_s = 4 kHz	I_{out_max4}	A	3.3	6.0	9.0	13.0	18.0
Maximum output current when f_s = 8 kHz	I_{out_max8}	A	3.3	6.0	9.0	13.0	18.0
Maximum output current when f_s = 12 kHz	I_{out_max12}	A	3.3	6.0	9.0	13.0	18.0
Maximum output current when f_s = 16 kHz	I_{out_max16}	A	3.3	6.0	9.0	13.0	18.0
Continuous output current when f_s = 4 kHz	I_{out_cont4}	A	1.4	2.4	3.0	4.4	7.6
Continuous output current when f_s = 8 kHz	I_{out_cont8}	A	1.0	1.8	2.6	4.2	7.6
Continuous output current when f_s = 12 kHz[5)]	I_{out_cont12}	A	0.6	1.2	1.7	2.7	7.6
Continuous output current when f_s = 16 kHz[6)]	I_{out_cont16}	A	0.5	0.8	1.1	1.9	7.6
Continuous output current when f_s = 4 kHz; output frequency $f_{out} < f_{out\_still}$	$I_{out\_cont0Hz\_4}$	A	1.1	2.1	3.0	4.4	7.6
Continuous output current when f_s = 8 kHz; output frequency $f_{out} < f_{out\_still}$	$I_{out\_cont0Hz\_8}$	A	0.9	1.6	2.3	3.1	6.0
Continuous output current when f_s = 12 kHz; output frequency $f_{out} < f_{out\_still}$[7)]	$I_{out\_cont0Hz\_12}$	A	0.5	1.0	1.4	2.0	5.0
Last modification: 2015-06-12							

Description	Symbol	Unit	HCS01.1E-W0003-_-02	HCS01.1E-W0006-_-02	HCS01.1E-W0009-_-02	HCS01.1E-W0013-_-02	HCS01.1E-W0018-_-02
Continuous output current when f_s = 16 kHz; output frequency $f_{out} < f_{out\_still}$ 8)	$I_{out\_cont0Hz\_16}$	A	0.4	0.7	0.9	1.3	4.2
Assigned output filters at nom. data; f_s = 4 kHz			tbd				
Last modification: 2015-06-12							

1) Also depending on firmware and control section; see parameter description "P-0-0001, Switching frequency of power output stage"; see "P-0-4058, Amplifier type data"
2) 3) Guide value, see following note
4) See following note regarding output current reduction
5) 6) 7) 8) See parameter description "P-0-0556, Config word of axis controller", load-dependent reduction of switching frequency fs

Tab. 7-48: HCS - Power section data - inverter

Power section data - inverter

Description	Symbol	Unit	HCS01.1E-W0005-_-03	HCS01.1E-W0008-_-03	HCS01.1E-W0018-_-03	HCS01.1E-W0028-_-03	HCS01.1E-W0054-_-03
Allowed switching frequencies 1)	f_s	kHz	4, 8, 12, 16				4, 8, 12
Output voltage, fundamental wave for V/Hz (U/f) control	V_{out_eff}	V	~UDC x 0.71				
Output voltage, fundamental wave for closed-loop operation	V_{out_eff}	V	~UDC x 0.71				
Rise of voltage at output with U_{LN_nenn} and 15 m motor cable length phase-phase (10-90%) 2)	dv/dt	kV/µs	5.00				
Rise of voltage at output with U_{LN_nenn} and 15 m motor cable length phase-ground (10-90%) 3)	dv/dt	kV/µs	5.00				
Output frequency range when f_s = 2 kHz	f_{out_2k}	Hz	-				
Output frequency range when f_s = 4 kHz	f_{out_4k}	Hz	0...400				
Output frequency range when f_s = 8 kHz	f_{out_8k}	Hz	0...800				
Output frequency range when f_s = 12 kHz	f_{out_12k}	Hz	0...1200				
Output frequency range when f_s = 16 kHz	f_{out_16k}	Hz	0...1600				-
Output frequency threshold for detecting motor standstill 4)	f_{out_still}	Hz	4				
Last modification: 2015-06-12							

Technical data of the components

Description	Symbol	Unit	HCS01.1E -W0005- _-03	HCS01.1E -W0008- _-03	HCS01.1E -W0018- _-03	HCS01.1E -W0028- _-03	HCS01.1E -W0054- _-03
Maximum output current when f_s = 2 kHz	I_{out_max2}	A	-				
Maximum output current when f_s = 4 kHz	I_{out_max4}	A	5.0	8.0	18.0	28.5	54.0
Maximum output current when f_s = 8 kHz	I_{out_max8}	A	5.0	8.0	18.0	28.5	40.0
Maximum output current when f_s = 12 kHz	I_{out_max12}	A	5.0	8.0	18.0	21.9	30.4
Maximum output current when f_s = 16 kHz	I_{out_max16}	A	5.0	8.0	16.5	17.6	-
Continuous output current when f_s = 2 kHz	I_{out_cont2}	A	-				
Continuous output current when f_s = 4 kHz	I_{out_cont4}	A	2.0	2.7	7.6	11.5	21.0
Continuous output current when f_s = 8 kHz	I_{out_cont8}	A	1.6	2.3	6.1	7.9	21.0
Continuous output current when f_s = 12 kHz[5)]	I_{out_cont12}	A	1.0	1.5	4.1	4.6	15.5
Continuous output current when f_s = 16 kHz[6)]	I_{out_cont16}	A	0.7	1.0	2.5	3.1	-
Continuous output current when f_s = 2 kHz; output frequency $f_{out} < f_{out\_still}$	$I_{out\_cont0Hz\_2}$	A	-				
Continuous output current when f_s = 4 kHz; output frequency $f_{out} < f_{out\_still}$	$I_{out\_cont0Hz\_4}$	A	1.8	2.7	7.0	11.5	21.0
Continuous output current when f_s = 8 kHz; output frequency $f_{out} < f_{out\_still}$	$I_{out\_cont0Hz\_8}$	A	1.3	1.9	2.3	4.7	12.0
Continuous output current when f_s = 12 kHz; output frequency $f_{out} < f_{out\_still}$[7)]	$I_{out\_cont0Hz\_12}$	A	0.8	1.2	1.4	2.2	7.5
Continuous output current when f_s = 16 kHz; output frequency $f_{out} < f_{out\_still}$[8)]	$I_{out\_cont0Hz\_16}$	A	0.6	0.8	0.4	1.2	-
Assigned output filters at nom. data; f_s = 4 kHz			tbd				
							Last modification: 2015-06-12

1) Also depending on firmware and control section; see parameter description "P-0-0001, Switching frequency of power output stage"; see "P-0-4058, Amplifier type data"

2) 3) Guide value, see following note

4)	See following note regarding output current reduction
5) 6) 7) 8)	See parameter description "P-0-0556, Config word of axis controller", load-dependent reduction of switching frequency fs

Tab. 7-49: HCS - Power section data - inverter

☞ **Guide value "Rise of voltage at output"**

Observe that the voltage load at the motor is almost independent of the power section used.

Especially when using **standard motors**, make sure that they comply with the occurring voltage load.

☞ **Reduced output current at motor standstill**

Depending on the electric output frequency, the output current is reduced for thermal protection of the power section.

The output current is reduced, when the electric output frequency has fallen below the threshold to detect motor standstill.

8 Cables, accessories, additional components

8.1 Overview

8.1.1 Cables

Motor power cables	See documentation "Rexroth IndraDyn S MSM Synchronous Motors" (R911329338) See documentation "Rexroth Connection Cables IndraDrive and IndraDyn" (R911322949)
Encoder cables	• RKG0033 (MSM motor, absolute value encoder M0) • RKG0034 (MSM motor, extension, absolute value encoder M0) • RKG0035 ($1V_{pp}$ Heidenhain standard) • RKG0036 (EnDat, SSI) • RKG0041 (incl. D-Sub connector RGS0001/K01; MSM motor, absolute value encoder M0) • RKG0062 (MSM motor, absolute value encoder M5) • RKG0063 (MSM motor, extension, absolute value encoder M5) • RKG0065 (incl. D-Sub connector RGS0001/K01; MSM motor, absolute value encoder M5) • RKG4200 (HIPERFACE®) See tab. 4-12 "Encoder cables for HCS01 converters and MSM motors" on page 54
Multi-Ethernet cables	• RKB0011 (To connect the drive system to the higher-level control unit) • RKB0013 (To connect devices arranged side by side)

Tab. 8-1: Cables - overview

8.1.2 Accessories

Accessories	Note
Mounting and connection accessories (HAS09) • Screws for mounting the component • Screws for connecting the equipment grounding conductor • Parts for shield connection and strain relief of cables (plates, screws, clips) • Adhesive labels with notes on safety in the English and French languages	Standard supply
DC bus connector (RLS0778/K06) Connector for connecting • the DC buses of several HCS01.1E-W00xx-x-**03** drive controllers • an HCS01.1E-W00xx-x-**03** drive controller to an HLC01.2 DC bus capacitor unit	To be ordered separately
Battery box (SUP-E01-MSM-BATTERYBOX) Accessory for operating MSM motors with absolute value encoder M0	To be ordered separately
Replacement battery (SUP-E03-DKC*CS-BATTRY) Replacement battery for SUP-E01-MSM-BATTERYBOX	To be ordered separately

Cables, accessories, additional components

Accessories	Note
Battery box (SUP-E02-MSM-BATTERYBOX) Accessory for operating MSM motors with absolute value encoder M5	To be ordered separately
Replacement battery (SUP-E02-MSM-BATTERY) Replacement battery for SUP-E02-MSM-BATTERYBOX	To be ordered separately
Encoder cable (RKG0041) Accessory for operating MSM motors with absolute value encoder M0	To be ordered separately
Encoder cable (RKG0065) Accessory for operating MSM motors with absolute value encoder M5	To be ordered separately
D-Sub connector (RGS0001/K01) Accessory for assembling an encoder cable for MSM motors with absolute value encoder M0	To be ordered separately
Hall sensor adapter box (SHL03.1-NNN-S-NNN) Accessory for connecting digital Hall sensors	To be ordered separately
Snap-on ferrite (HAS05.1-015-NNN-NN) Accessory for external HLR braking resistors	To be ordered separately

Tab. 8-2: Accessories - overview

8.1.3 Additional Components

Additional component	Type
Transformer	DST (autotransformer)
Mains filter	NFE NFD
Mains choke	HNL01.1E
Braking resistor	HLR01.2
DC bus capacitor unit	HLC01.2

Tab. 8-3: Additional Components - Overview

8.2 Accessories

8.2.1 Mounting and connection accessories (HAS09)

Use

The accessories contain:

- Screws for mounting the component
- Screws for connecting the equipment grounding conductor
- Parts for shield connection of cables (plates, screws)
- Parts for shield connection of module bus cables (heat shrink tubing, copper tape)
- Adhesive labels with notes on safety in the English and French languages. Place the adhesive labels clearly visibly at the component or in the immediate vicinity of the component, if the adhesive labels existing at the component are hidden by neighboring components.

The accessories are part of the standard scope of supply.

Assignment

Accessories	Component
HAS09.1-**001**-NNN-NN	HCS01.1E-W0003 … W0028
HAS09.1-**003**-NNN-NN	HCS01.1E-W0054
HAS09.1-**004**-NNN-NN	HLC01.2; HLR01.2N

Tab. 8-4: HAS09 and HCS01

Cables, accessories, additional components

Product insert

HAS09.1-001-NNN-NN

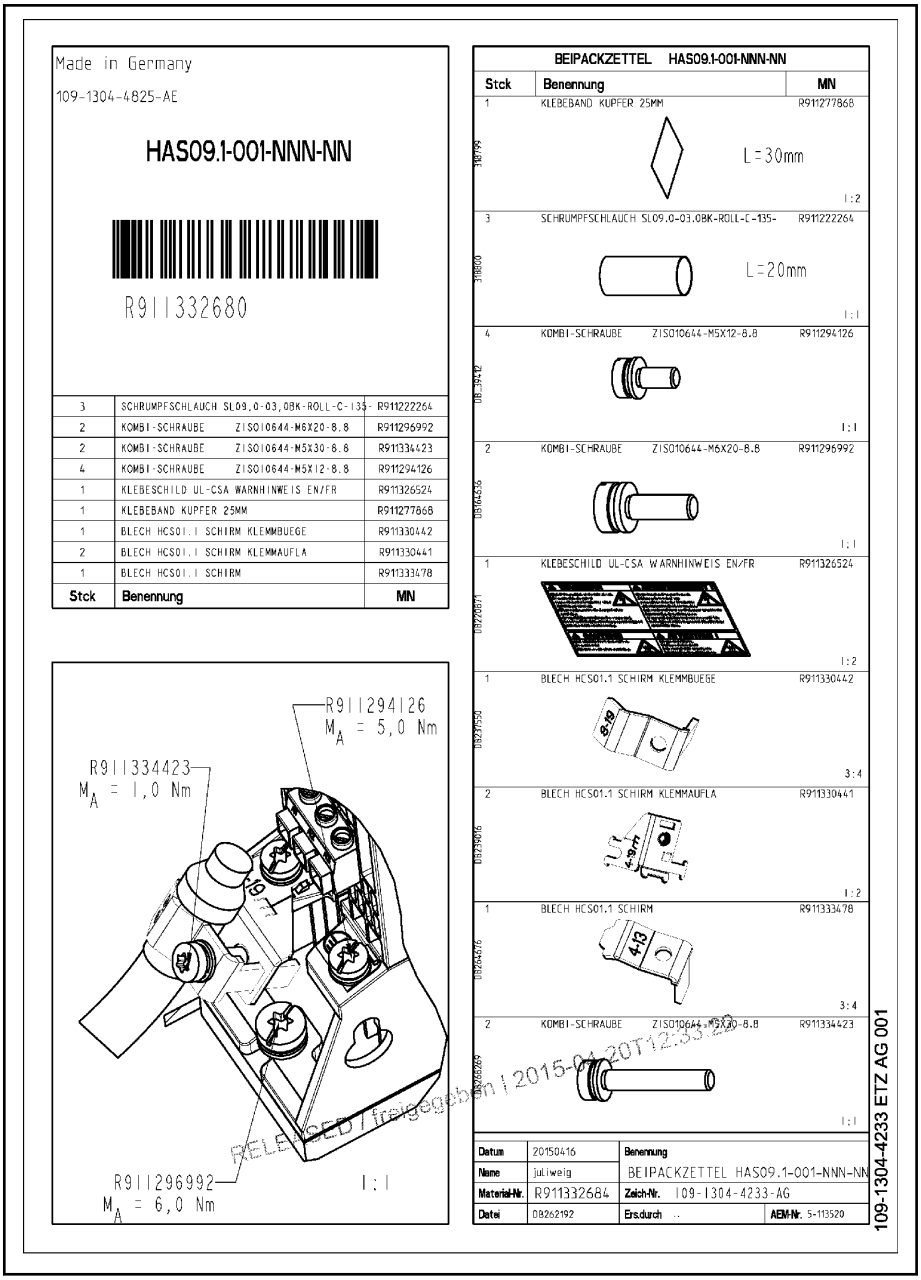

Fig. 8-1: HAS09.1-001-NNN-NN product insert

HAS09.1-003-NNN-NN

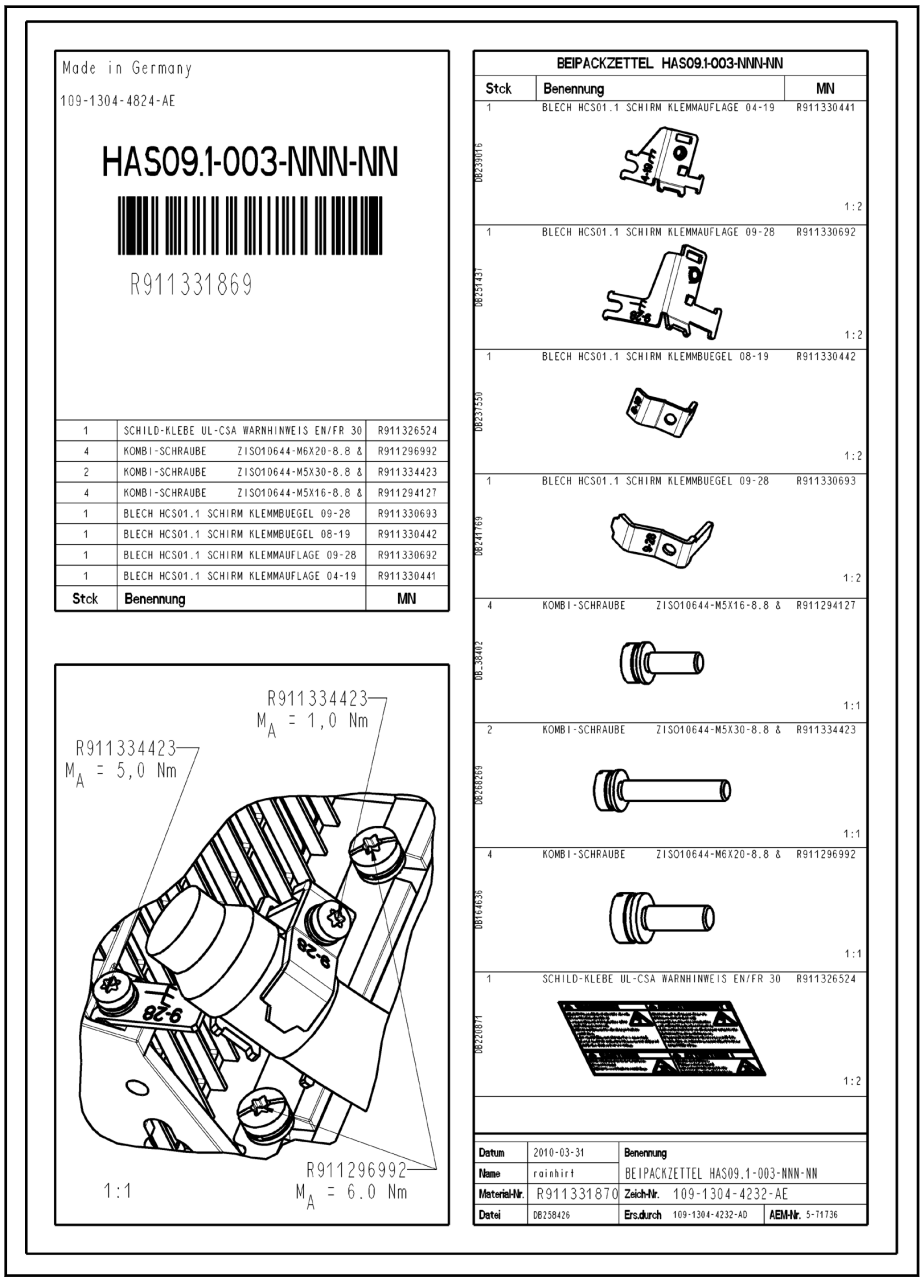

Fig. 8-2: HAS09.1-003-NNN-NN product insert

Cables, accessories, additional components

Plates for shield connection of cables

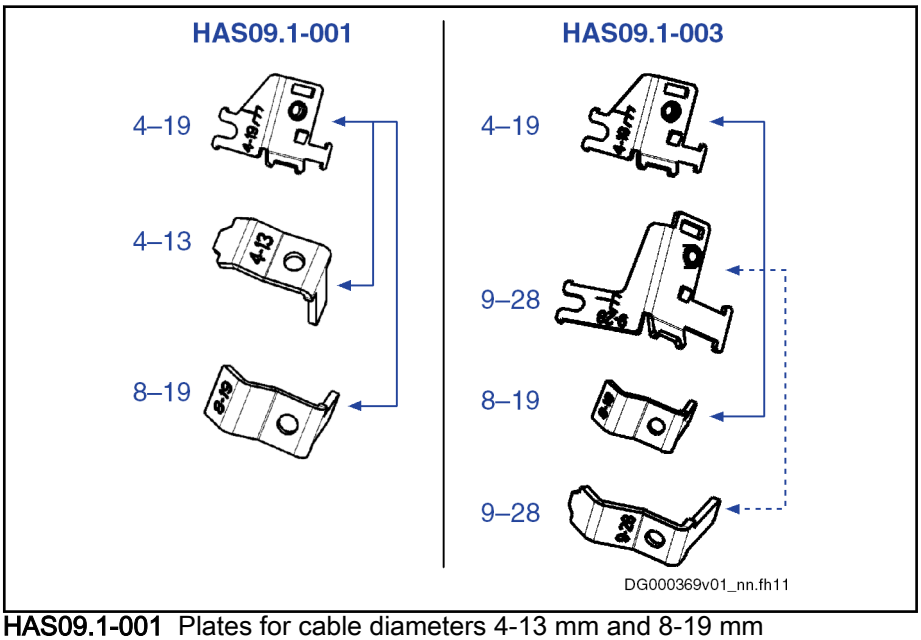

HAS09.1-001 Plates for cable diameters 4-13 mm and 8-19 mm
HAS09.1-003 Plates for cable diameters 8-19 mm and 9-28 mm

Fig. 8-3: HAS09; plates

HAS09.1-004-NNN-NN

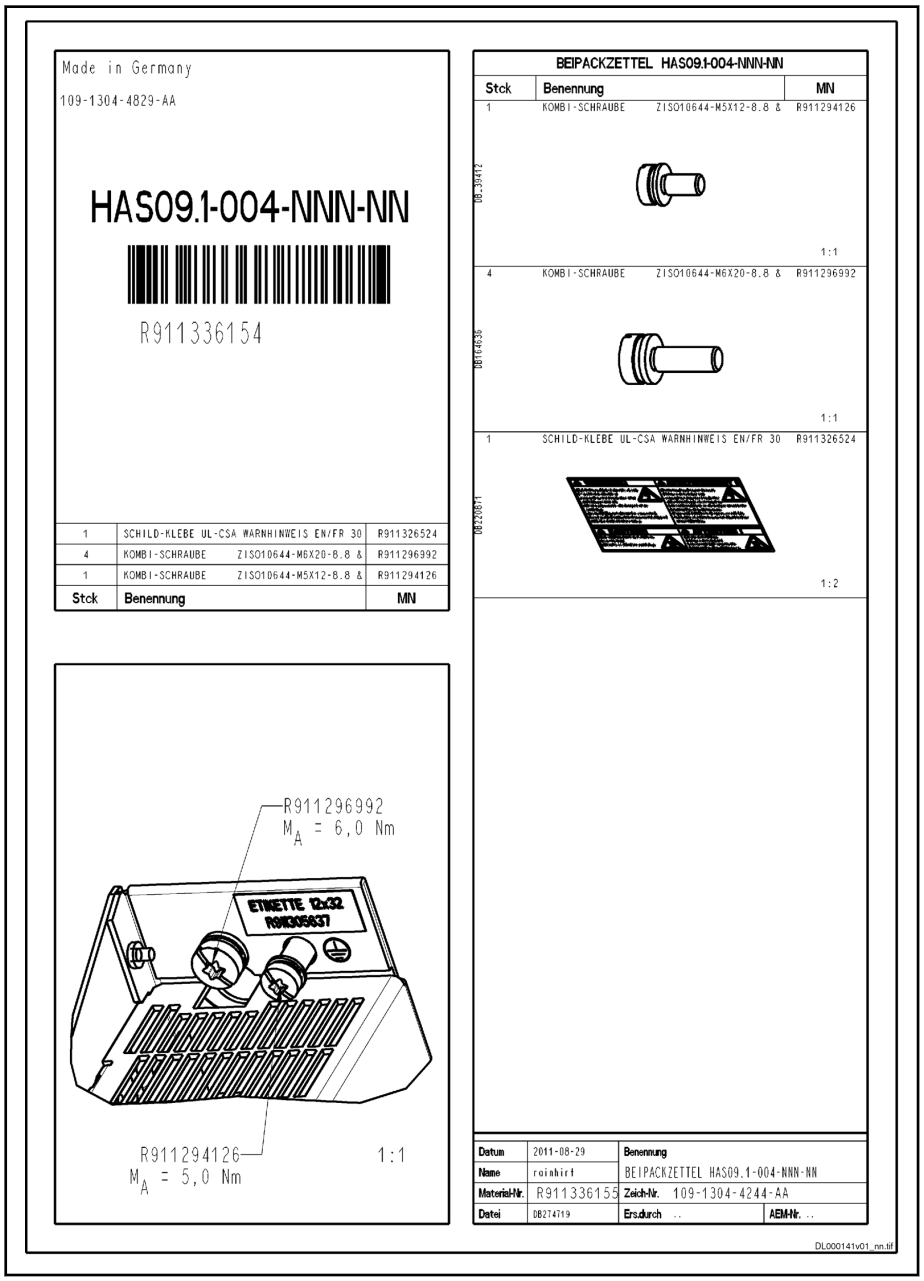

Fig. 8-4: HAS09.1-004-NNN-NN product insert

Module bus cable shield connection

Use shielded cables for the module bus in the following cases:

- An **individual** module bus connection is **> 0.5 m** long.
- **All** drive system module bus connections together are **> 3 m** long.

The HAS09.1-001 accessories contain parts for assembling shielded module bus cables:

- Heat shrink tubing (3 × 20 mm)
- Self-adhesive copper tape (1 × 30 mm)

Use shielded **cables** of a conductor size **≥ 2 × 0.5 mm²**.

Observe the data of connection point X47.

Assembling cables:

1. Strip cable: A = 24 mm, B = 180 mm, C = 35 mm

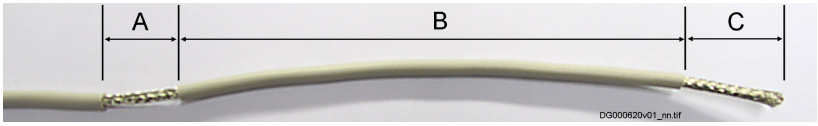

Fig. 8-5: Stripping the cable

2. Remove protective foil, then wrap self-adhesive copper tape around shield braid.

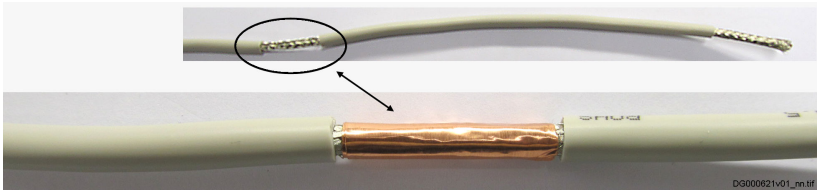

Fig. 8-6: Copper tape

3. Put 2 heat shrink tubings on cable and shrink them.

Fig. 8-7: Heat shrink tubing

4. Fold back shield braid over cable jacket and strip wire ends.

Fig. 8-8: Shield braid, wire ends

5. Put heat shrink tubing on shield braid and shrink it. Optional: Mount wire end ferrules.

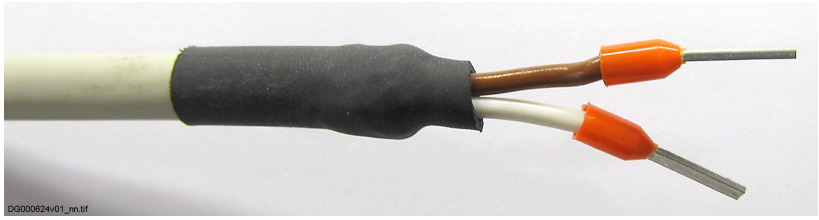

Fig. 8-9: Heat shrink tubing, wire end ferrules

6. Connect cable shield to plate from accessories. Optional: Fasten cable with cable tie.

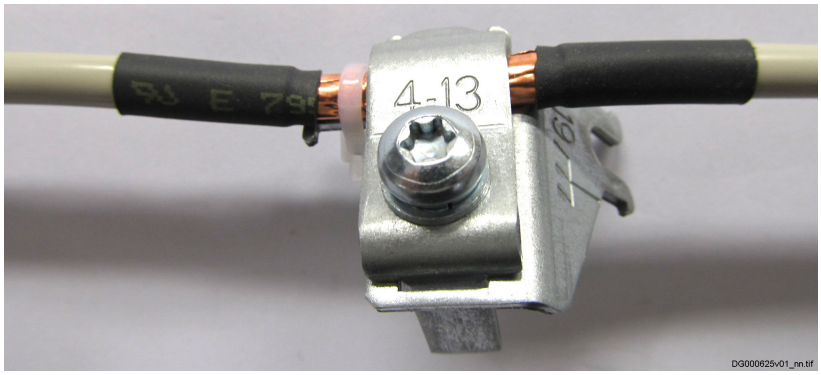

Fig. 8-10: Shield connection

Cables, accessories, additional components

8.2.2 DC Bus Connector (RLS0778/K06)

Use Connector for connecting

- the DC buses of several HCS01.1E-W00xx-x-**03** drive controllers
- an HCS01.1E-W00xx-x-**03** drive controller to a DC bus capacitor unit

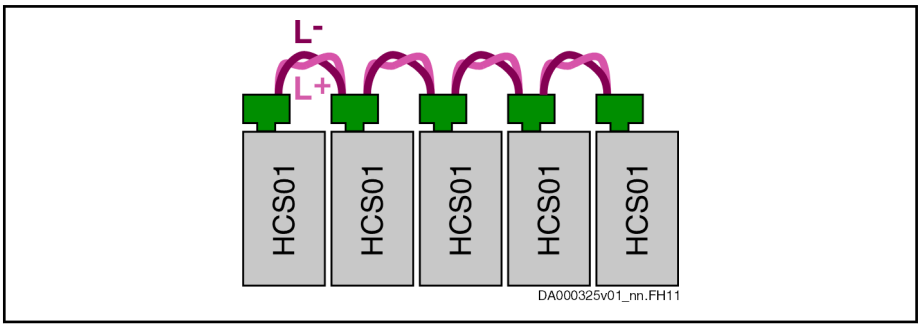

Fig. 8-11: Connecting the DC Buses via DC Bus Connectors

DC bus connector	DC bus connector at device (connection point X77)
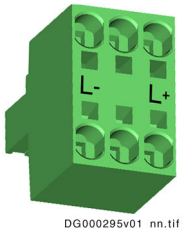 Order code: RLS0778/K06	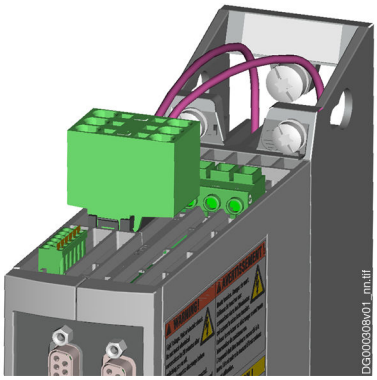

Tab. 8-5: DC Bus Connector

8.2.3 Battery box SUP-E01-MSM-BATTERYBOX

Use

The battery box "SUP-E01-MSM-BATTERYBOX" is an set of accessories for operation of MSM motors with absolute encoder (M0) and is used for buffering of the encoder data in case of power shut off.

Scope of delivery

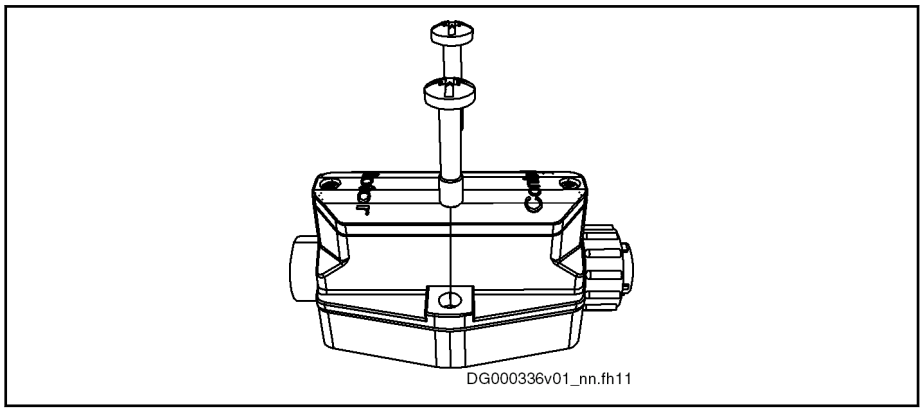

Fig. 8-12: Battery box

Battery box complete with

- **Battery:** Type: ER6C, 3.6 V; 1800 mA, lithium; lifetime: up to 10 years, depending on use and ambient temperature
- **Assembly screws:** M6×30; screw head: Torx and slot

The battery box "SUP-E01-MSM-BATTERYBOX" is delivered in ready-for-use state with battery.

Components:

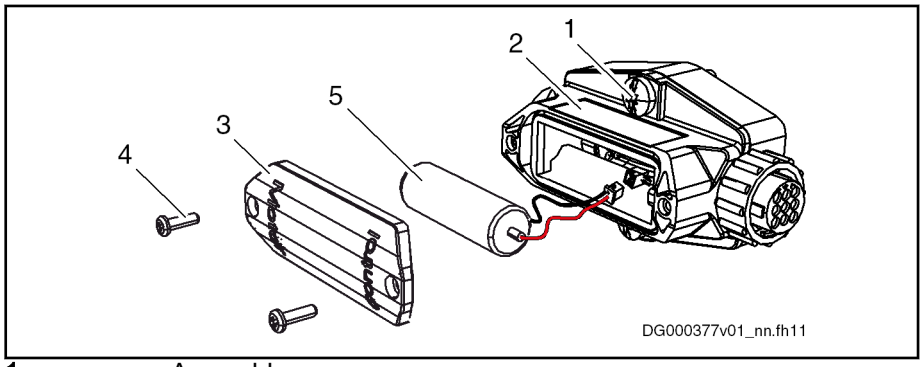

1	Assembly screw
2	Housing
3	Housing lid
4	Housing lid screw (self-shaping screw 30×10; tightening torque 0.8 Nm)
5	Battery

Fig. 8-13: Components of battery box

Cables, accessories, additional components

Dimensions

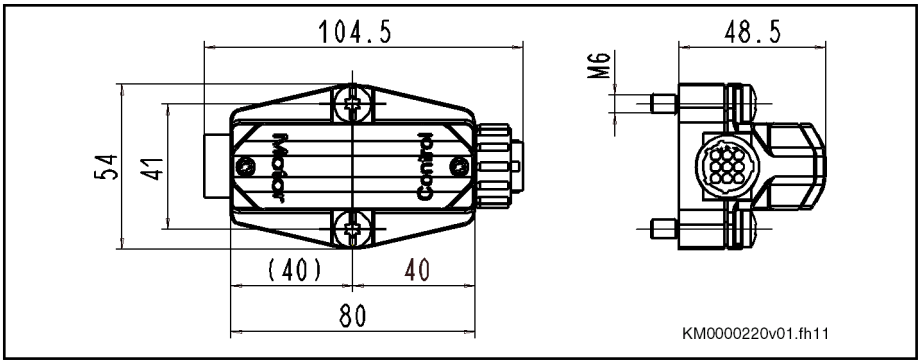

Fig. 8-14: Dimensions

Weight 120 g

Mounting

Install the battery box in the immediate vicinity of the motor.

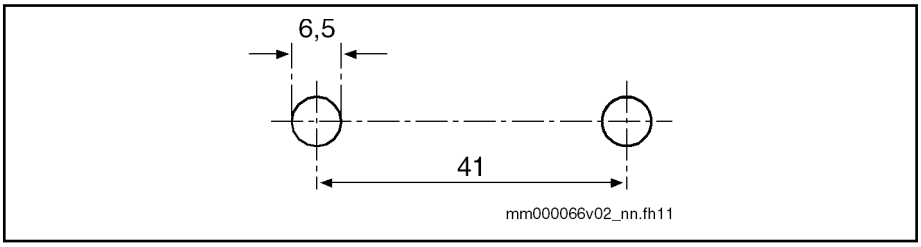

Fig. 8-15: Drilling diagram for battery box

- Assembly screws: M6×30
- Tightening torque M_A: 3 Nm

Cabling

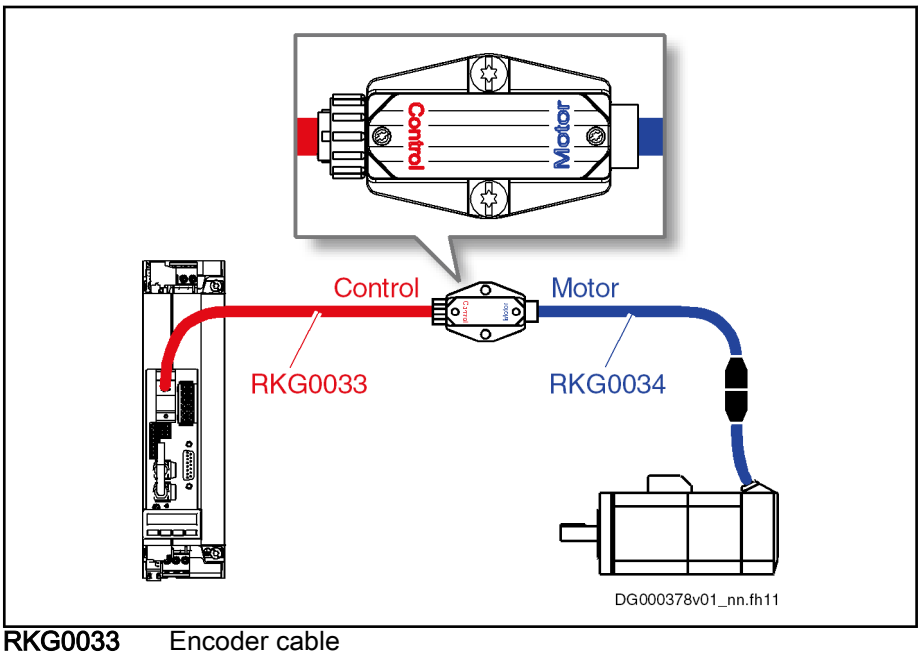

RKG0033 Encoder cable
RKG0034 Extension cable (optional)

Fig. 8-16: Cabling of battery box

8.2.4 Battery and refresh resistor (SUP-E03-DKC*CS-BATTRY)

Use

The **battery** is used as a replacement battery for the "SUP-E01-MSM-BATTERYBOX" battery box.

The **refresh resistor** is used to prepare the battery before the battery is used in the battery box "SUP-E01-MSM-BATTERYBOX".

Content

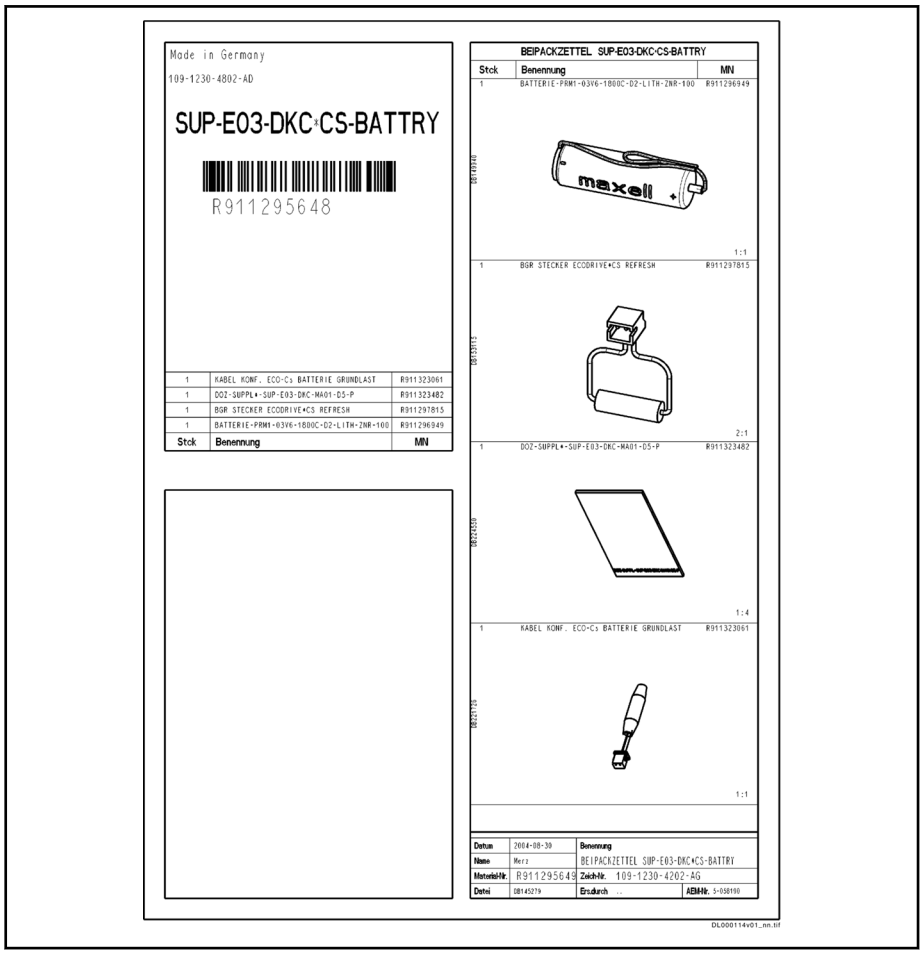

*Fig. 8-17: SUP-E03-DKC*CS-BATTRY - product insert*

Cables, accessories, additional components

Battery	Type: ER6C, 3.6 V; 1800 mA, lithium Lifetime: Depends on load and ambient temperature 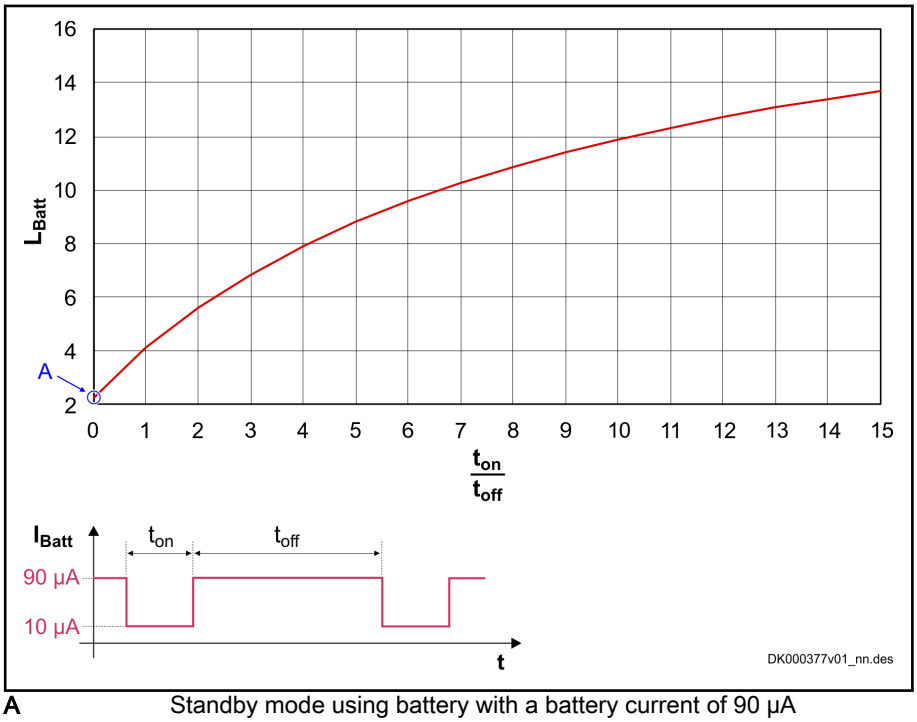 **A** Standby mode using battery with a battery current of 90 µA **I_{Batt}** Battery current **L_{Batt}** Battery lifetime in years **t_{on}** Drive controller On time **t_{off}** Drive controller Off time *Fig. 8-18: Battery lifetime depending on load* **Example:** With a relation t_{on}/t_{off} = 5 (every day, drive controller is on for 20 hours and off for 4 hours), the battery lifetime is approx. 9 years.
Refresh resistor	10 ohm; the refresh resistor is used to prepare the battery before the battery is used in the battery box "SUP-E01-MSM-BATTERYBOX".
Documentation **(DOZ-SUPPL*-SUP-E03-DKC-MA01-D5-P)**	Information in 5 languages on the refresh procedure of the battery and on how to connect the battery and the base load resistor.
Base load resistor	The base load resistor (500 kOhm) is only relevant to **EcoDrive Cs** drive controllers (when they are operated without the SUP-E01-MSM-BATTERYBOX battery box).

*Tab. 8-6: SUP-E03-DKC*CS-BATTRY - content*

Refresh

Before using a new battery, you always have to carry out the so-called "refresh" procedure:

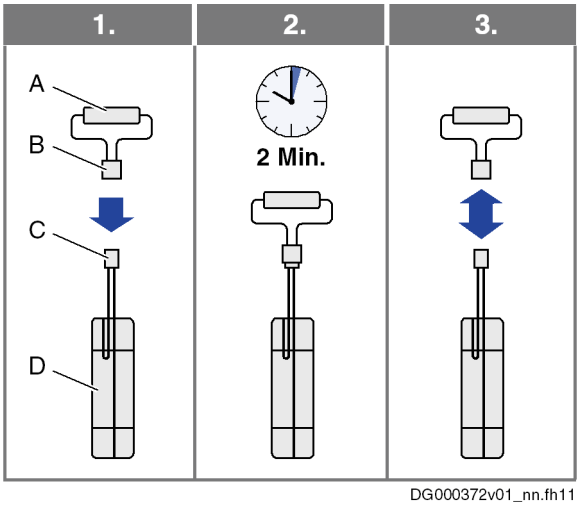

A	Refresh resistor
B	Mating connector
C	Connector
D	Battery

Fig. 8-19: Battery refresh procedure

1. Connect connector of battery to mating connector at refresh resistor.
2. Wait **2 minutes**.
3. Disconnect connector from mating connector.

Replacing the battery

To maintain the **absolute value encoder position** when the battery is replaced, the following requirements have to be fulfilled:

- The **control voltage** at the drive controller has been switched on
- The **encoder** has been connected to the drive controller via the encoder cable

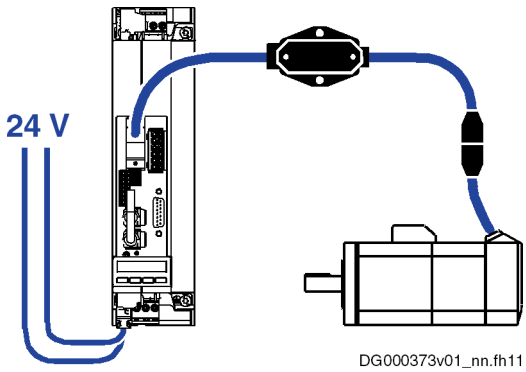

Fig. 8-20: Control voltage switched on and encoder connected

Cables, accessories, additional components

☞ If you replace the battery with the control voltage switched off, the absolute value encoder position and thereby the position data reference of the axis are lost.

Reestablishing the position data reference: See firmware function "Establishing position data reference for absolute measuring systems → "Set absolute position" command"

1.	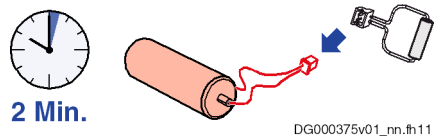	• If not yet done, carry out refresh procedure with the new battery.
2.	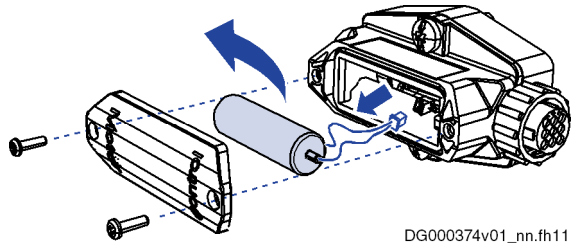	• Unscrew cover of battery box. • Remove old battery and dispose of it according to directives valid in your country.

3.	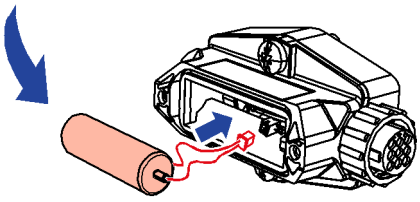	• Insert new battery into battery compartment. • Connect connector of battery to mating connector in battery compartment. • Place cable in battery compartment in such a way that cover is flush with battery box when screwed on in the next step.
4.	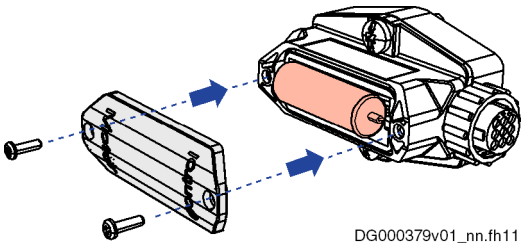 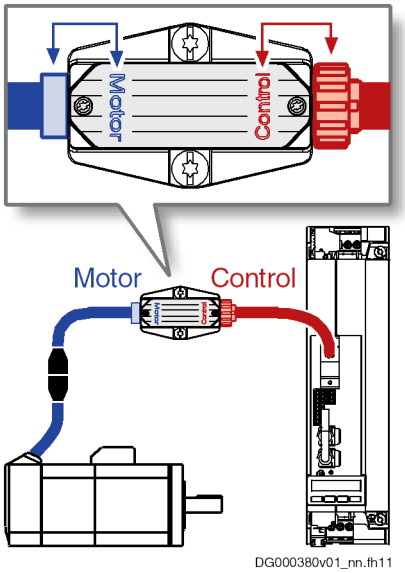	• Screw on cover in correct orientation (tightening torque: 0.8 Nm). • Check whether cover fits correctly. Cable in battery compartment should not get stuck between cover and battery box. Cover has to be flush with battery box at all points.

Tab. 8-7: Replacing the battery

Cables, accessories, additional components

8.2.5 SUP-E02-MSM-BATTERYBOX battery box

Use

The "SUP-E02-MSM-BATTERYBOX" battery box is a set of accessories used to operate MSM motors with absolute value encoder (M5) and to back-up the encoder data in case voltage is switched off.

Dimensions

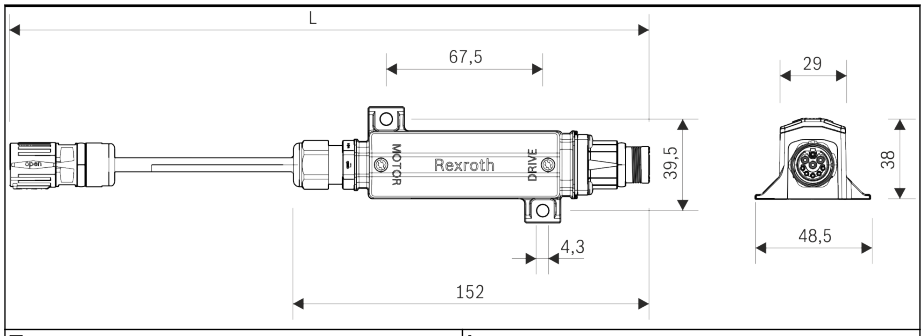

Type	L
SUP-E02-MSM-BATTERYBOX-NNNN	250 mm
SUP-E02-MSM-BATTERYBOX-L010	1000 mm
SUP-E02-MSM-BATTERYBOX-L030	3000 mm

Tab. 8-8: Dimensions

Scope of supply

Battery box incl. battery.

The battery box is supplied in operational condition.

Battery:

- Type: PRM1-03V6-2600C-D2-LITH-ZNR-50
- 3.6 V; 2600 mAh; lithium
- Lifetime: up to 10 years, depending on load and ambient temperature
- Replacement battery: R911369925 (SUP-E02-MSM-BATTERY)

Parts:

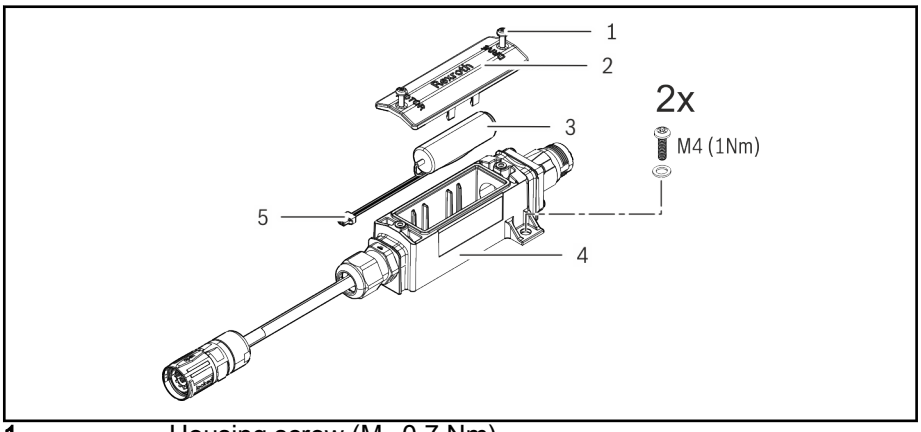

1 Housing screw (M_A 0.7 Nm)
2 Housing cover
3 Battery
4 Housing
5 Battery connector

Fig. 8-21: Battery box parts

Mounting

To fasten the battery box, use mounting screws **2 × M4** with washer and screw lock. Mounting screws are not contained in the scope of supply and have to be adjusted to the assembly situation.

Tightening torque of mounting screws: **1 Nm**.

Cabling

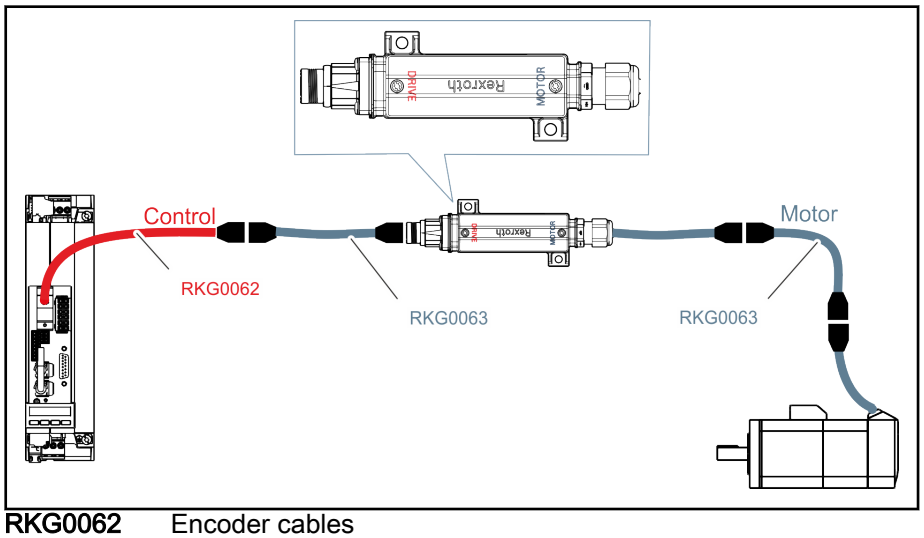

RKG0062 Encoder cables
RKG0063 Extension cable (optional)

Fig. 8-22: Battery box cabling

8.2.6 Encoder cable for MSM motors with absolute value encoder M0 (RKG0041)

Use

The RKG0041 encoder cable (mat. no.: R911335747) is used to operate MSM motors with absolute value encoder M0. The encoder cable is connected to the encoder evaluation of the drive controller via a D-Sub connector with integrated 4-pin spring terminal (RGS0001/K01).

A battery or a UPS is connected to the spring terminal so that the encoder data are buffered and the position of the absolute value encoder is retained in case voltage is switched off. For drive controllers arranged side by side, the voltage can be looped through via the spring terminal to the neighboring drive controllers.

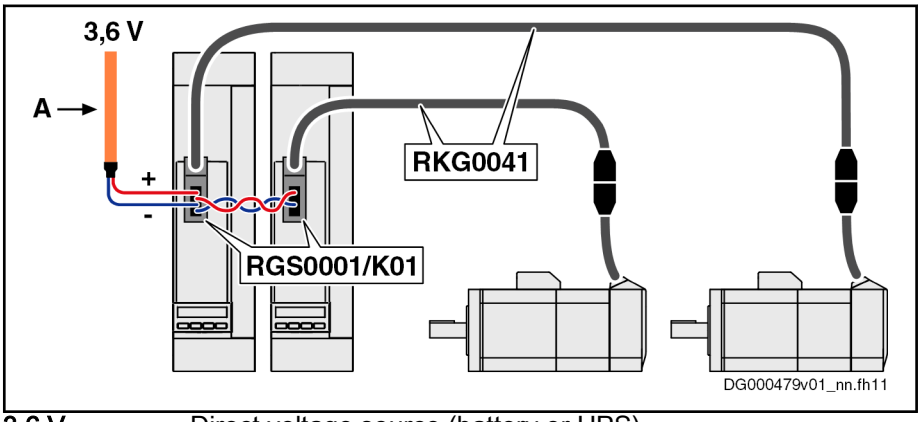

3.6 V	Direct voltage source (battery or UPS)
A	Shielded lines; e.g. (2x0.5)C
RKG0041	Encoder cables
RGS0001/K01	D-Sub connector with integrated 4-pin spring terminal

Fig. 8-23: RKG0041 with D-Sub Connector RGS0001/K01

Properties

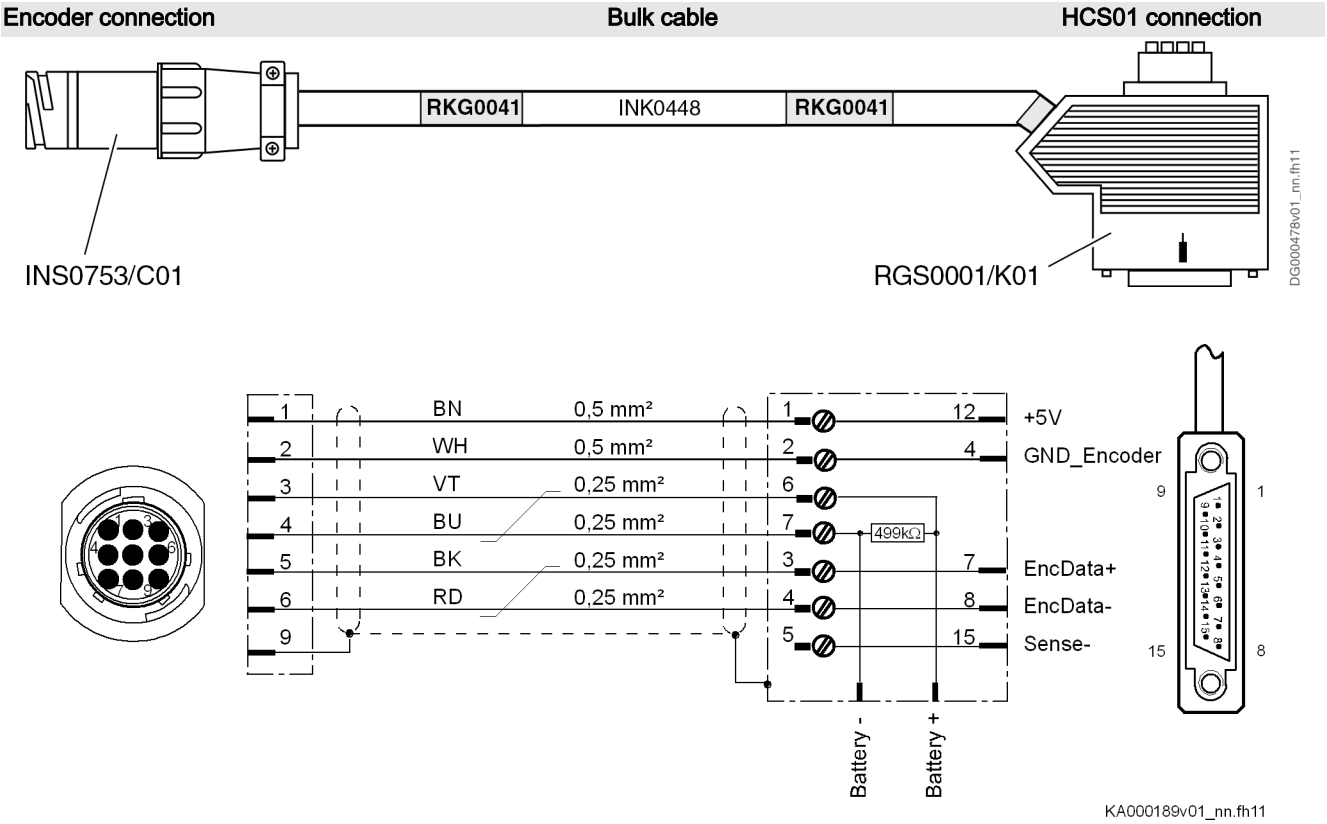

Tab. 8-9: RKG0041

Length **40 m** at most (reason: no Sense line active).

Spring terminal

View	Con-nection	Signal name	Function
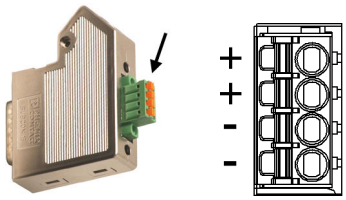	+	+3.6V	Voltage input
	+		
	-	0V	Reference potential
	-		

Spring terminal (connector)	Unit	min.	max.
Connection cable	mm^2	0.2	1.5
Stranded wire	AWG	24	16
Stripped length	mm	10	

Tab. 8-10: Spring terminal

Project planning

UPS DC 3.6 V ±10%; 1 mA

Battery 3.6 V; lithium

Lithium batteries are long-life batteries and can be stored for a long time. The required capacity depends on the desired battery lifetime and the number of connected motors. The battery is not included in the scope of supply and has to be ordered separately.

- Recommended battery type:

  maxell ER6C; 3.6 V / 1.8 Ah

  (The accessory SUP-E03-DKC*CS-BATTRY (mat. no.: R911295648) contains this battery.)
- Alternative battery types:
  - TADIRAN SL760, 3.6 V / 2.1 Ah
  - JAUCH ER17505, 3.6 V / 3.6 Ah
  - JAUCH ER34615 3.6 V / 19 Ah

☞ To be observed for transport:

The alternative battery types have a relatively high content of lithium and are Class 9 hazardous material.

Selecting the battery capacity 1.8 Ah per drive

The base load resistance in the D-Sub connector has been adjusted to this battery capacity. The lifetime of the battery depends on the On and Off times of the drive; with a battery capacity of 1.8 Ah it is approx. 2 to 10 years.

Battery current per drive (encoder current + base load current):

- Drive Off: approx. 70 µA
- Drive On: approx. 10 µA

Battery base load and battery capacity

The D-Sub connector contains a base load resistance of 499 kΩ. The base load resistance causes a standby current of 7 µA which has to flow with 3.6 V / 1.8 Ah for a lithium battery. This prevents the battery from aging prematurely and gives it a relatively long service life.

If you use a bigger battery (> 1.8 Ah) at one D-Sub connector only, connect an external resistor at the 4-pin spring terminal so that a higher standby current flows.

How to calculate the external resistance (R_{ext}):

R_{ext} = 3.6 V / I_{ext}

I_{ext} = [battery capacity / 1.8 Ah] × 7 µA - (7 µA × number_connectors)

Examples

- 1 D-Sub connector + battery 1.8 Ah ⇒

  No additional base load resistance required
- 1 D-Sub connector + battery 3.6 Ah ⇒

  Additional base load resistance of 499 kΩ required

- 2 D-Sub connectors + battery 3.6 Ah ⇒
  No additional base load resistance required
- 5 D-Sub connectors + battery 36 Ah ⇒
  Additional base load resistance of 34 kΩ required
  Calculation
  – I_{ext} = [36 Ah / 1.8 Ah] × 7 µA - (7 µA × 5) = 105 µA
  – R_{ext} = 3.6 V / 105 µA = 3.6 V / 0.000105 A = 34 kΩ

☞ The examples contain guide values for the base load resistance. The required base load resistance cannot be calculated by means of the capacity for every lithium battery.

A lithium battery with a 5-fold higher capacity might possibly require not more that a 3-fold higher base load current. If you use other batteries than ER6C (1800 mAh), ask the battery manufacturer for the required base load current.

Installation

Connecting the battery / UPS

⚠ WARNING **Risk of injury by exploding batteries!**

Pay attention to

- the correct polarity when connecting the battery
  NOTICE! Incorrect polarity might damage the encoder system.
- the correct dimensioning of the external resistor
- the safety instructions of the battery manufacturer

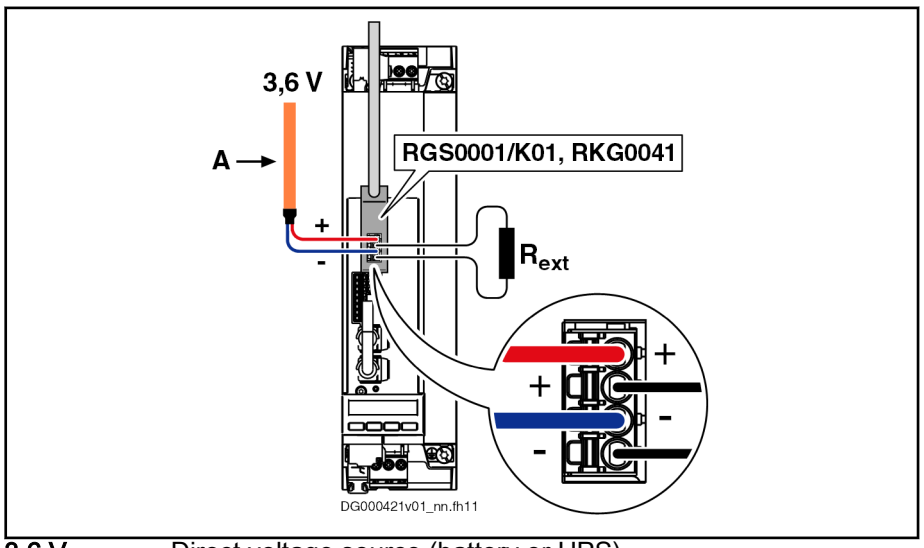

3.6 V	Direct voltage source (battery or UPS)
A	Shielded lines, e.g. (2x0,5)C; connect cable shield to shield connection at top of device
R_{ext}	External resistor: If you use a bigger battery (> 1.8 Ah) at one RGS0001/K01 D-Sub connector only, connect an additional external resistor (value of R_{ext}: see "Battery base load and battery capacity").

Fig. 8-24: Connecting the battery / UPS

Cables, accessories, additional components

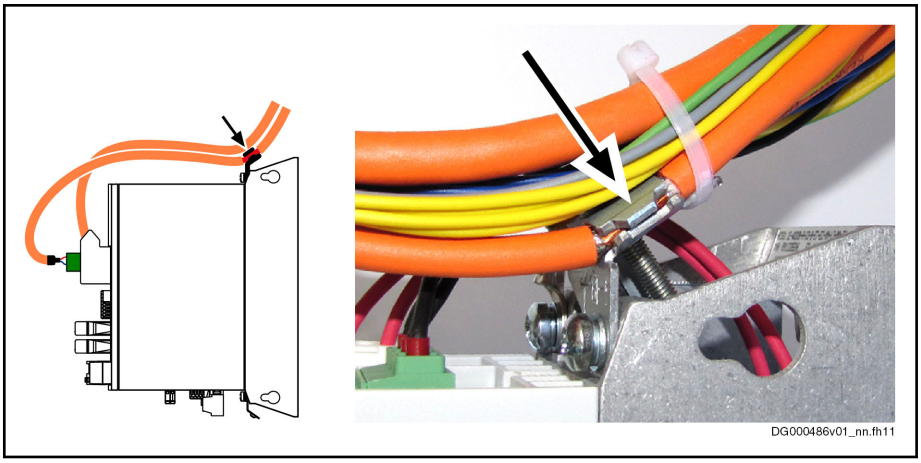

Fig. 8-25: Shield Connection of Shielded Lines at the Top of the Device

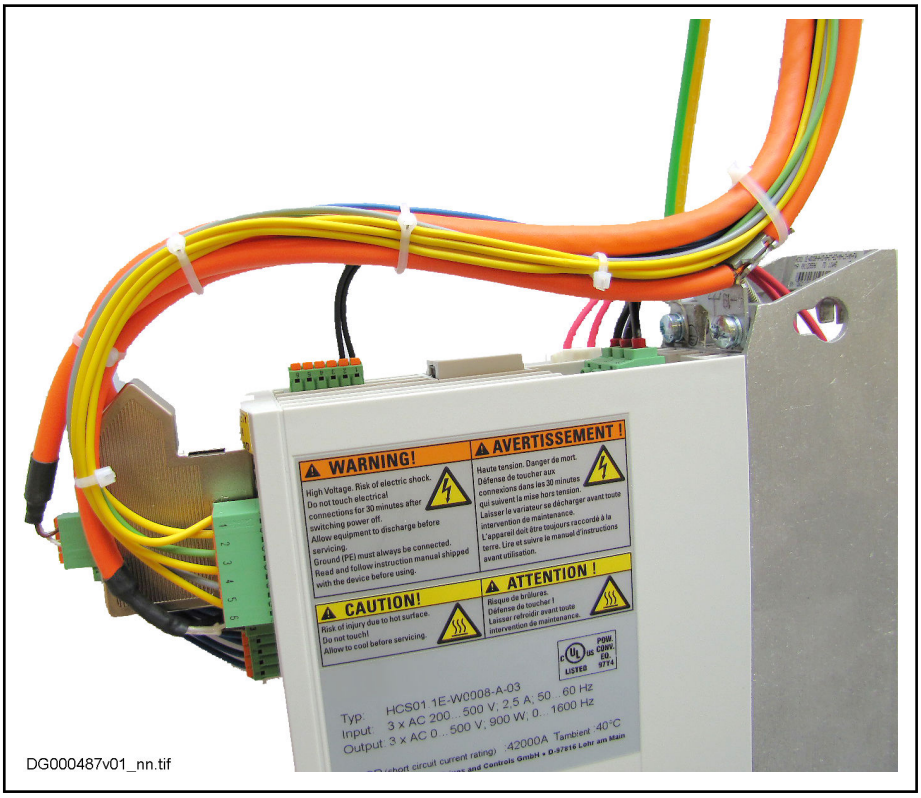

Fig. 8-26: Example of a complete wiring

Looping through the voltage

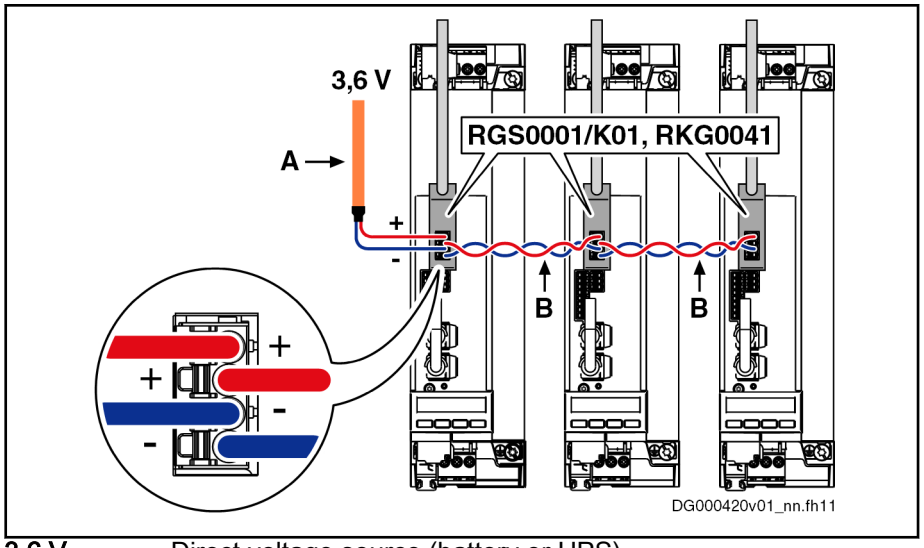

3.6 V	Direct voltage source (battery or UPS)
A	Shielded lines, e.g. (2x0,5)C; connect cable shield to shield connection at top of device
B	Twisted single wires

Fig. 8-27: Looping through the voltage

Replacement of devices

When replacing an HCS01, observe the following aspect:

Leave the 4-pin spring terminal with the connected battery/UPS at the D-Sub connector so that voltage is still applied and the encoder position is retained.

Cables, accessories, additional components

8.2.7 D-Sub Connector for Encoder Cable and Battery Connection (RGS0001/K01)

☞ Using our **ready-made encoder cable** RKG0041 (part no. R911335747) saves you the time-consuming and error-prone work of assembling your encoder cable.

The RKG0041 encoder cable comes with an RGS0001/K01 D-Sub connector and a correctly wired motor-side encoder connection.

Use The accessory **RGS0001/K01** (part no. R911335738) is used to operate MSM motors with absolute value encoders. RGS0001/K01 is a D-Sub connector with an integrated 4-pin spring terminal and an internal terminal connector for encoder cables.

A battery or a UPS is connected to the spring terminal so that the encoder data are buffered and the position of the absolute value encoder is retained in case voltage is switched off.

RGS0001/K01

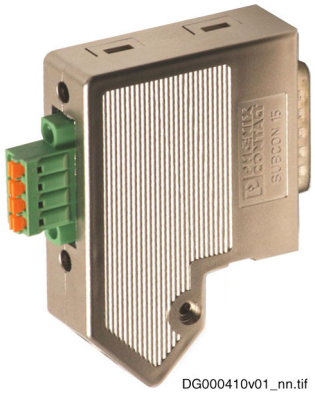

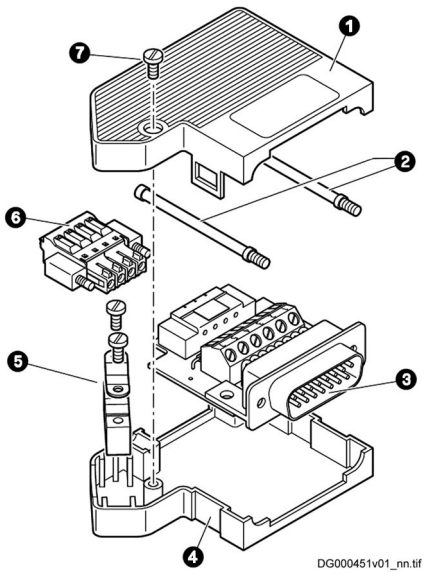

1	Top shell of housing
2	Mounting screws
3	Circuit board with terminal connector for the encoder cable, female connector (6), base load resistance (to avoid premature aging of a connected 3.6 V lithium battery) and D-Sub connector (15-pin)
4	Bottom shell of housing
5	Strain relief and shield connection of encoder cable
6	4-pin spring terminal for connecting a 3.6 V lithium battery or the corresponding UPS; via the spring terminal, the voltage can be looped through to other drive controllers
7	Housing screw

Fig. 8-28: Parts

Tab. 8-11: RGS0001/K01

When you connect the RGS0001/K01 connector to an encoder cable, you must assemble the encoder cable accordingly on the motor side:

In accordance with the interconnection diagram, connect the battery wires for motor-side encoder connection in the connector (INS0753/C01).

Scope of Supply

- RGS0001/K01
- Product insert with information on assembly

Dimensions

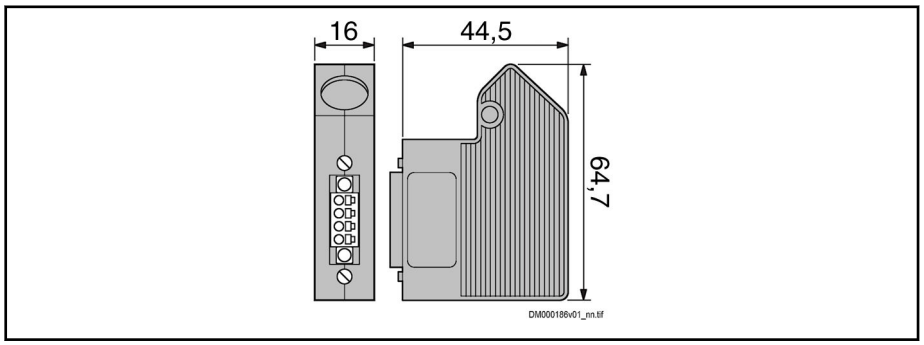

Fig. 8-29: Dimensions

Interconnection Diagram

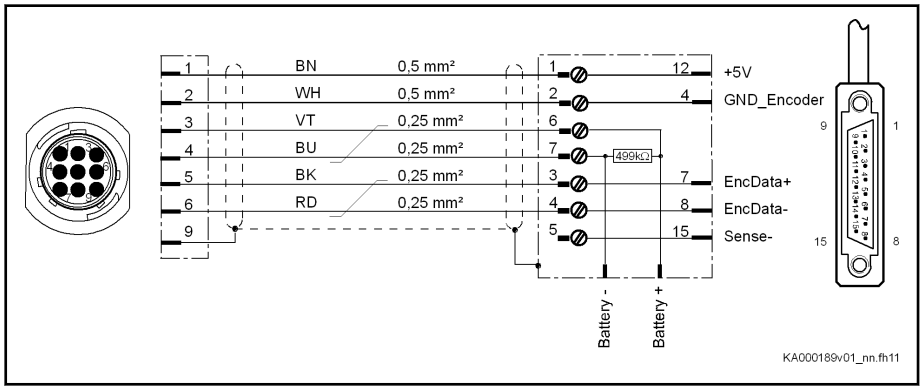

Fig. 8-30: Interconnection Diagram

Assembly in Conjunction with Cable INK0448

1. Assemble cable:

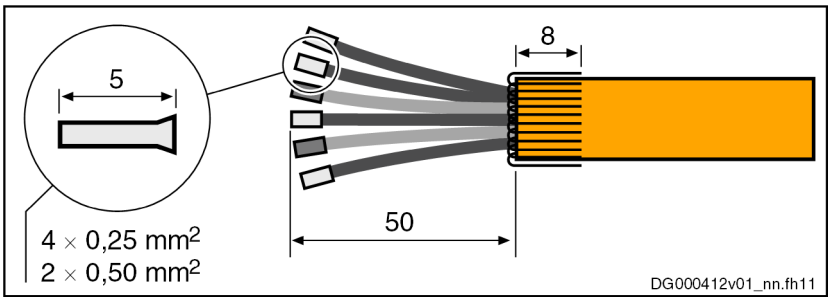

Required ferrules:

- 4 × 0.25 mm²
- 2 × 0.50 mm²

- Length: 5 mm
- Without plastic collar

Length of inner wires incl. ferrules starting at cable jacket: 50 mm

Fold back shield braid over outer cable jacket, comb it out and cut it to 8 mm.

2. Open housing:

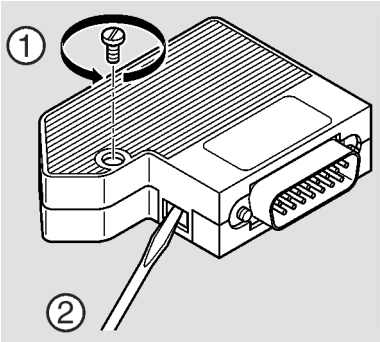

- Unscrew housing screw ①.
- Unlock top shell of housing with screwdriver and open housing ②.

3. Connect cable according to interconnection diagram.
4. Insert circuit board into housing in accordance with desired outgoing direction of encoder cable.

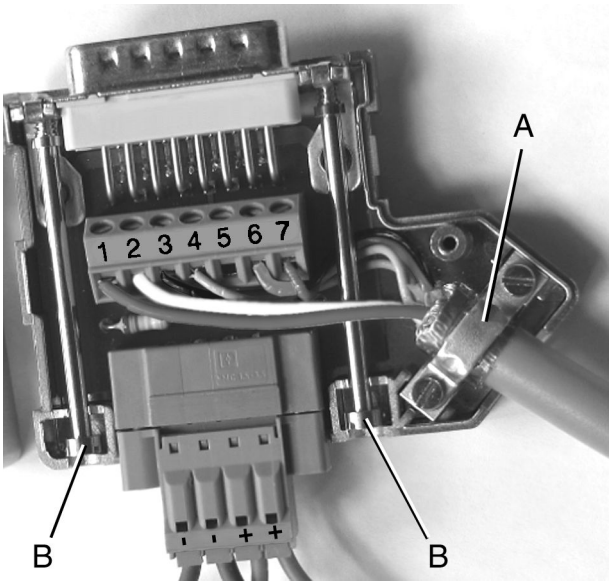

- Put shield braid under clip (A) of strain relief and screw on clip (A).
- Insert mounting screws (B) and tuck wires away.

5. Close housing:

   Put top shell of housing onto bottom shell of housing, engage it in bottom shell and screw housing screw down.

6. Unless already done:
   - By means of appropriate crimping tool, add the two contacts for battery connection.

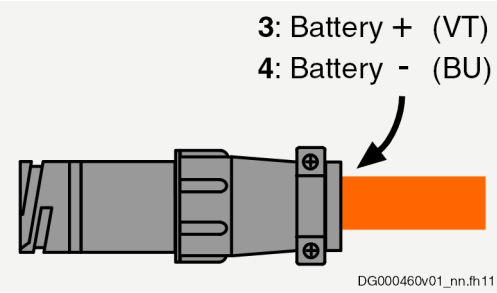
3: Battery + (VT)
4: Battery - (BU)
DG000460v01_nn.fh11

Cables, accessories, additional components

8.2.8 Encoder cable for MSM motors with absolute value encoder M5 (RKG0065)

The RKG0065 encoder cable (mat. no.: R911347431) is used to operate MSM motors with absolute value encoder M5. The encoder cable is connected to the encoder evaluation of the drive controller via a D-Sub connector with integrated 4-pin spring terminal (RGS0001/K01).

Encoder connection	Bulk cable	HCS01 connection

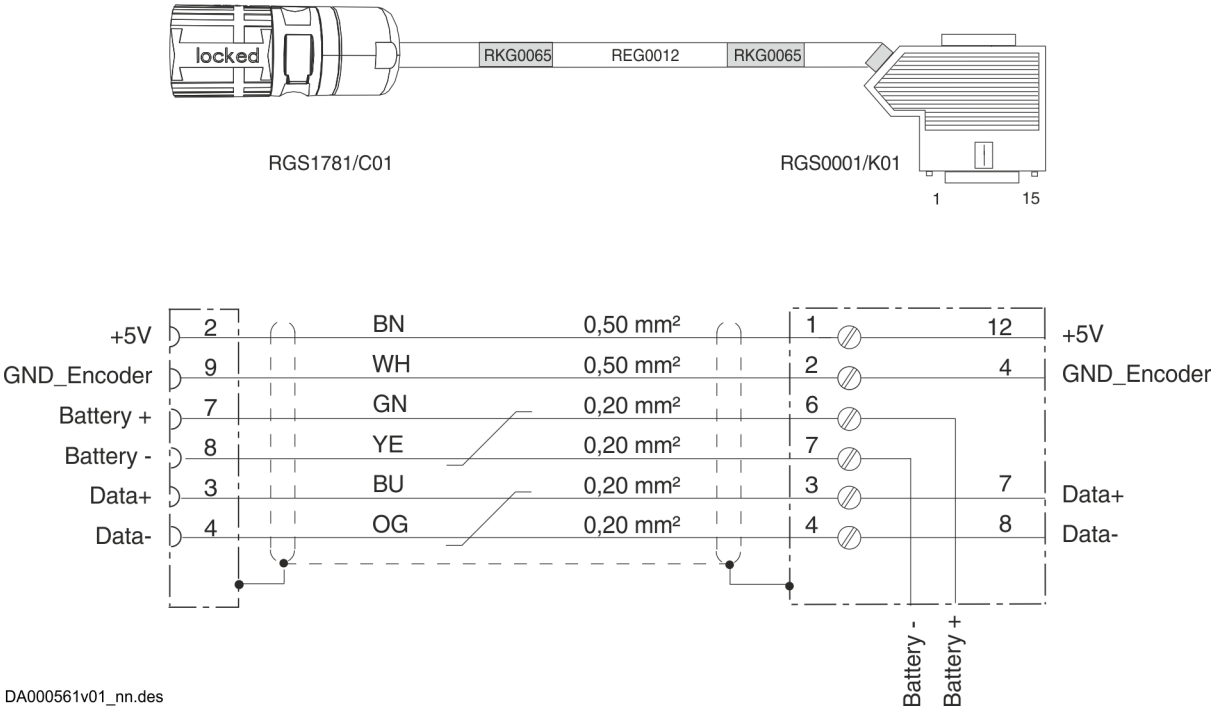

Tab. 8-12: RKG0065

8.2.9 RKB0011, Multi-Ethernet Cable

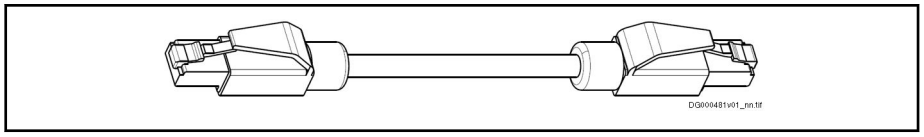

Fig. 8-31: RKB0011

Use The cable connects the drive system to the higher-level control.

Length That Can Be Ordered, Order Code

Length	Order code	Parts number
Select as desired (max. 100 m)	RKB0011/xxx,x (xxx,x = length in meters) Example: 13.5 m ⇒ RKB0011/013,5	R911316888
5 m	RKB0011/005,0	R911321548

Tab. 8-13: RKB0033

RKB0011		
Plug-in connector bus	**Bulk cable**	**Plug-in connector bus**
RBS0016/S01 (RJ-45, 4-pin)	REB0400	RBS0016/S01 (RJ-45, 4-pin)

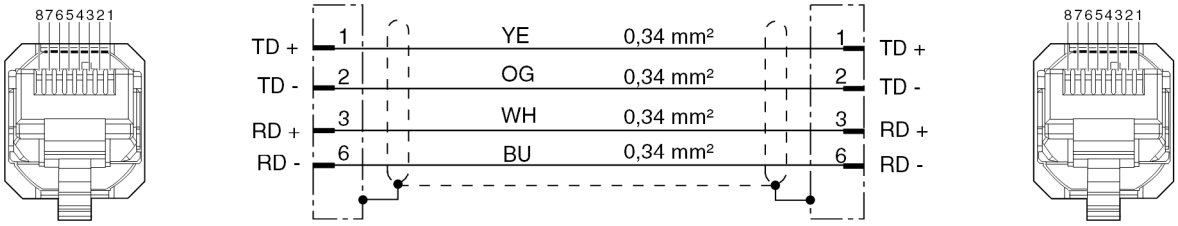

KA000170v02_nn.fh11

Tab. 8-14: Interconnection Diagram RKB0011

Cables, accessories, additional components

8.2.10 RKB0013, Multi-Ethernet Cable

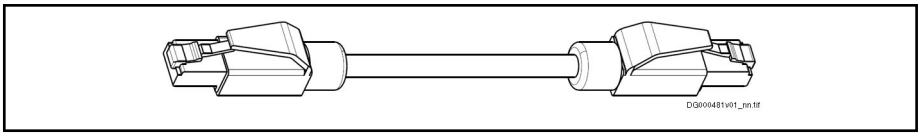

Fig. 8-32: RKB0013

Use Short cable for connecting a drive connection box KCU to a neighboring device in the control cabinet.

Minimum bending radius: 30.75 mm

Length That Can Be Ordered, Order Code

Length	Order code	Parts number
0.55 m	RKB0013/00,55	R911317801

Tab. 8-15: RKB0013

RKB0013		
Plug-in connector bus	**Bulk cable**	**Plug-in connector bus**
RJ-45, 8-pin	sercos III cable, 100-Base-T, CAT5E, shielded	RJ-45, 8-pin

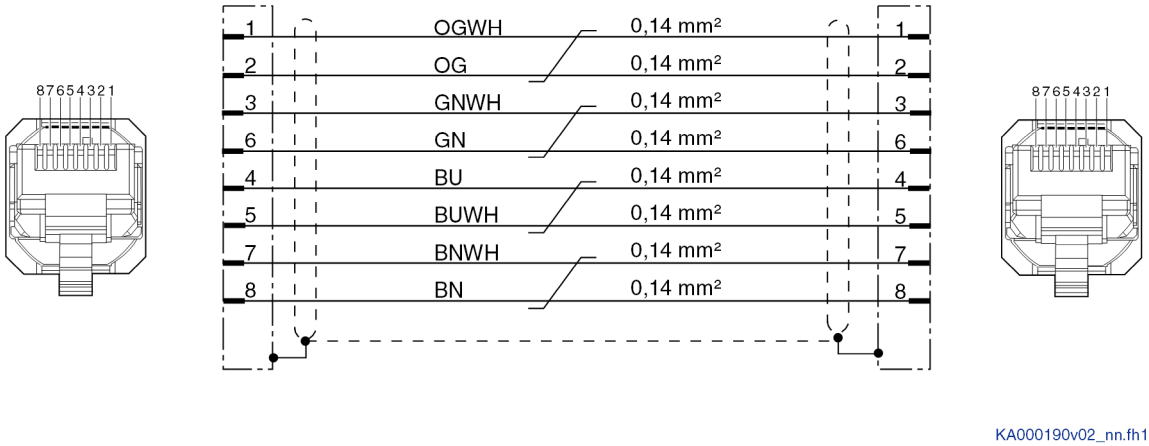

Use instruction: only fixed lengths

Tab. 8-16: Interconnection Diagram RKB0013

8.2.11 Hall Sensor Adapter Box (SHL03.1-NNN-S-NNN)

Use

The Hall sensor adapter box "SHL03.1-NNN-S-NNN" (material number: R911335257) is used to operate linear MCL motors. The Hall sensor adapter box processes signals of the following systems:

- Digital Hall sensor
- Length measuring system

The Hall sensor adapter box transmits the signals for encoder evaluation to the drive controller.

The housing is made of sheet steel and has the degree of protection IP20.

For detailed information on linear MCL motors, see the documentation "Rexroth IndraDyn L, Ironless Linear Motors MCL" (R911330592).

Dimensions

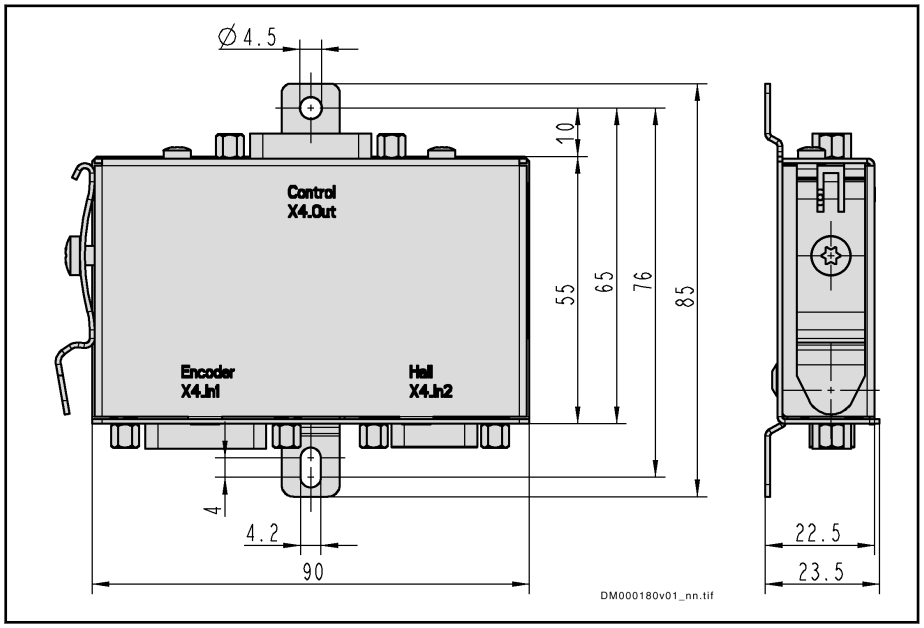

Fig. 8-33: Dimensions

Mounting

Options for mounting:

- Top-hat rail (TH 35-7.5 according to EN 60715)
- With 2 screws (M4) to the mounting surface; select the appropriate screw type and length for the mounting surface

The mounting position can be selected as desired.

Cables, accessories, additional components

Connection Points

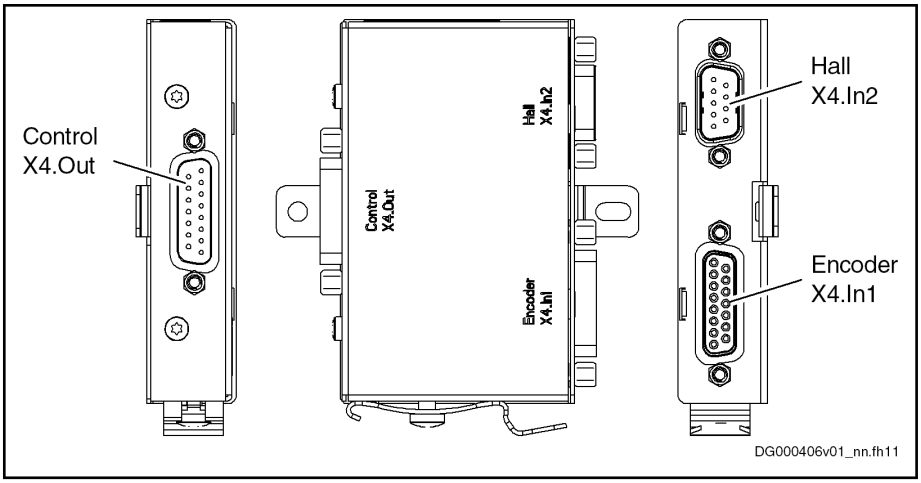

Fig. 8-34: Connection Points

Encoder X4.In1

View	Identification	Function
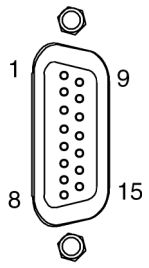 DA000053v01_nn.FH9	Encoder X4.In1	Encoder connection

D-Sub, 15-pin, female	Unit	Min.	Max.
Connection cable Stranded wire	mm^2	0,25	0,5

Tab. 8-17: Function, Pin Assignment, Properties

Connection	Signal	Function
1	GND_shld	Connection signal shields (inner shields)
2	A+	Track A positive
3	A-	Track A negative
4	GND_Encoder	Reference potential for power supplies
5	B+	Track B positive
6	B-	Track B negative
7	n. c.	
8	n. c.	
9	R+	Reference track positive
10	R-	Reference track negative
11	+12V	Encoder supply 12 V

Connection	Signal	Function
12	+5V	Encoder supply 5V
13	n. c.	
14	n. c.	
15	Sense	Return of reference potential (Sense line)
Connector housing		Overall shield

Tab. 8-18: Pin Assignment

Hall X4.In2

View	Identification	Function
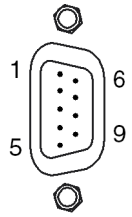	Hall X4.In2	Hall sensor connection

D-Sub 9-pin, male	Unit	Min.	Max.
Connection cable Stranded wire	mm^2	0,25	0,5

Tab. 8-19: Function, Pin Assignment, Properties

Connection	Signal	Function
1	+12 V	Power supply
2	S1	Hall sensor signal 1
3	GND	Reference potential for power supply
4	S2	Hall sensor signal 2
5	GND	Reference potential for power supply
6	GND	Reference potential for power supply
7	GND	Reference potential for power supply
8	S3	Hall sensor signal 3
9	GND	Reference potential for power supply
Connector housing		Overall shield

Tab. 8-20: Pin Assignment

Cables, accessories, additional components

Control X4.Out

View	Identification	Function
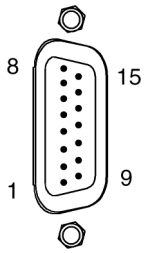 DA000056v01_nn.FH9	Control X4.Out	Connection for encoder evaluation of drive controller

D-Sub 15-pin, male	Unit	Min.	Max.
Connection cable Stranded wire	mm^2	0,25	0,5

Tab. 8-21: Function, Pin Assignment, Properties

Connection	Signal	Function
1	GND_shld	Connection signal shields (inner shields)
2	A+	Track A analog positive
3	A-	Track A analog negative
4	GND_Encoder	Reference potential for power supplies
5	B+	Track B analog positive
6	B-	Track B analog negative
7	Data_Hall+	Data transmission Hall sensor signal positive
8	Data_Hall-	Data transmission Hall sensor signal negative
9	R+	Reference track positive
10	R-	Reference track negative
11	+12V	Encoder supply 12 V
12	+5V	Encoder supply 5V
13	CLK_Hall+	Clock Hall sensor signal positive
14	CLK_Hall-	Clock Hall sensor signal negative
15	Sense-	Return of reference potential (Sense line)
Connector housing		Overall shield

Tab. 8-22: Pin Assignment

Cables, accessories, additional components

Cables

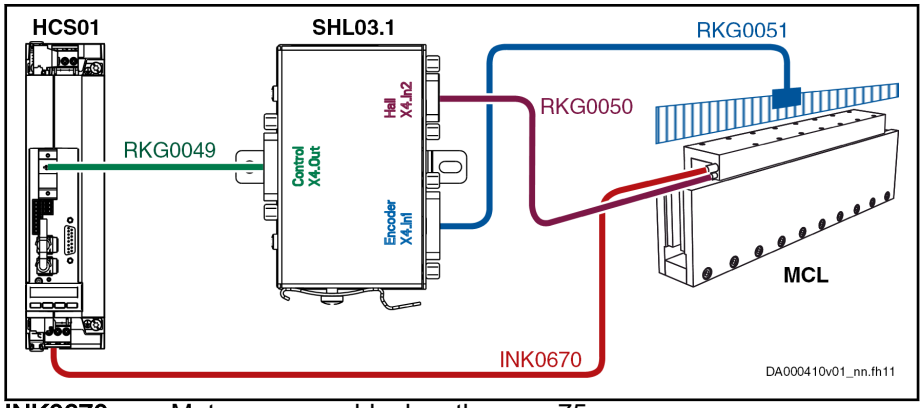

INK0670	Motor power cable; length: max. 75 m
RKG0049	Hall sensor adapter box (Control X4.Out) ↔ Encoder evaluation at drive controller (X4, X8); length: max. 75 m
RKG0050	Digital Hall sensor ↔ Hall sensor adapter box (Hall X4.In2); length: max. 30 m
RKG0051	Length measuring system ↔ Hall sensor adapter box (Encoder X4.In1); length: max. 30 m

Fig. 8-35: Cables

Interconnection Diagram RKG0049

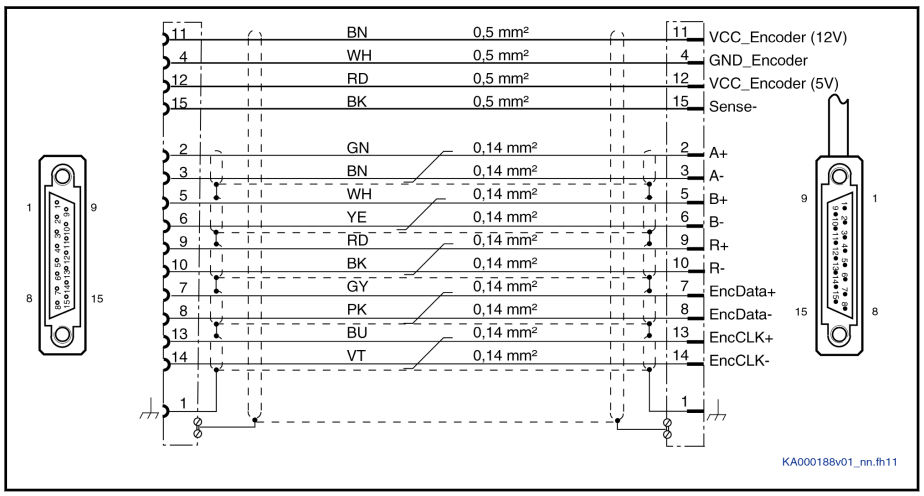

Fig. 8-36: RKG0049

Interconnection Diagram RKG0050

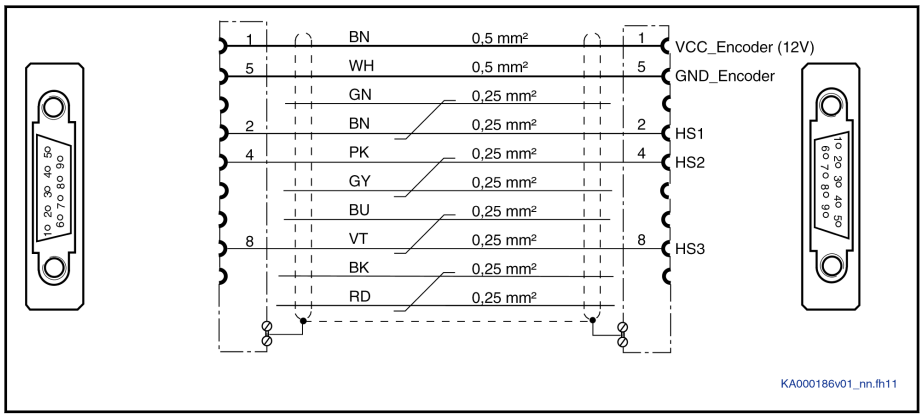

Fig. 8-37: RKG0050

Cables, accessories, additional components

Interconnection Diagram RKG0051

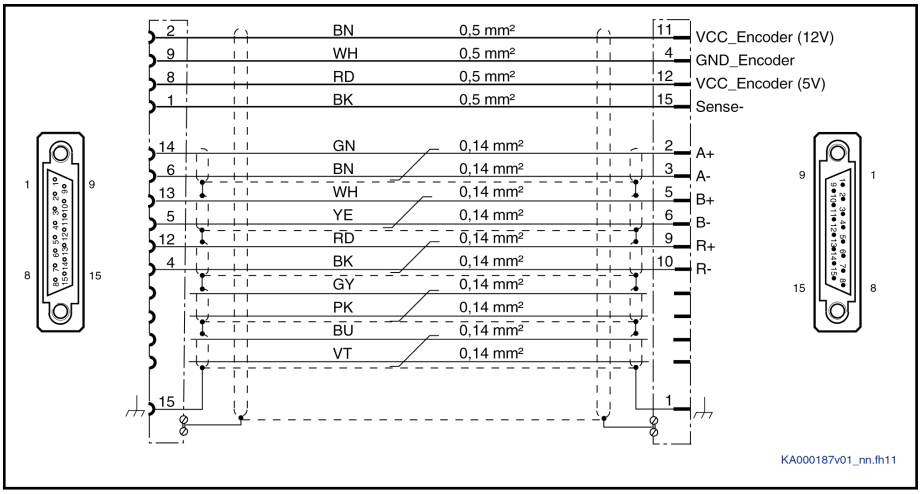

Fig. 8-38: RKG0051

8.2.12 Snap-on ferrite (HAS05.1-015)

Use

The accessory HAS05.1-015-NNN-NN (snap-on ferrite) ensures that Class C3 of the EMC Directive EN 61800-3 is complied with for braking resistors installed outside of the control cabinet.

The snap-on ferrite is designed for the following components:

- HCS01.1E-W00**18** + HLR01.2N-01K0-N**68**R0-E-007
- HCS01.1E-W00**28** + HLR01.2N-01K0-N**68**R0-E-007
- HCS01.1E-W00**54** + HLR01.2N-01K0-N**28**R0-E-007

Product insert

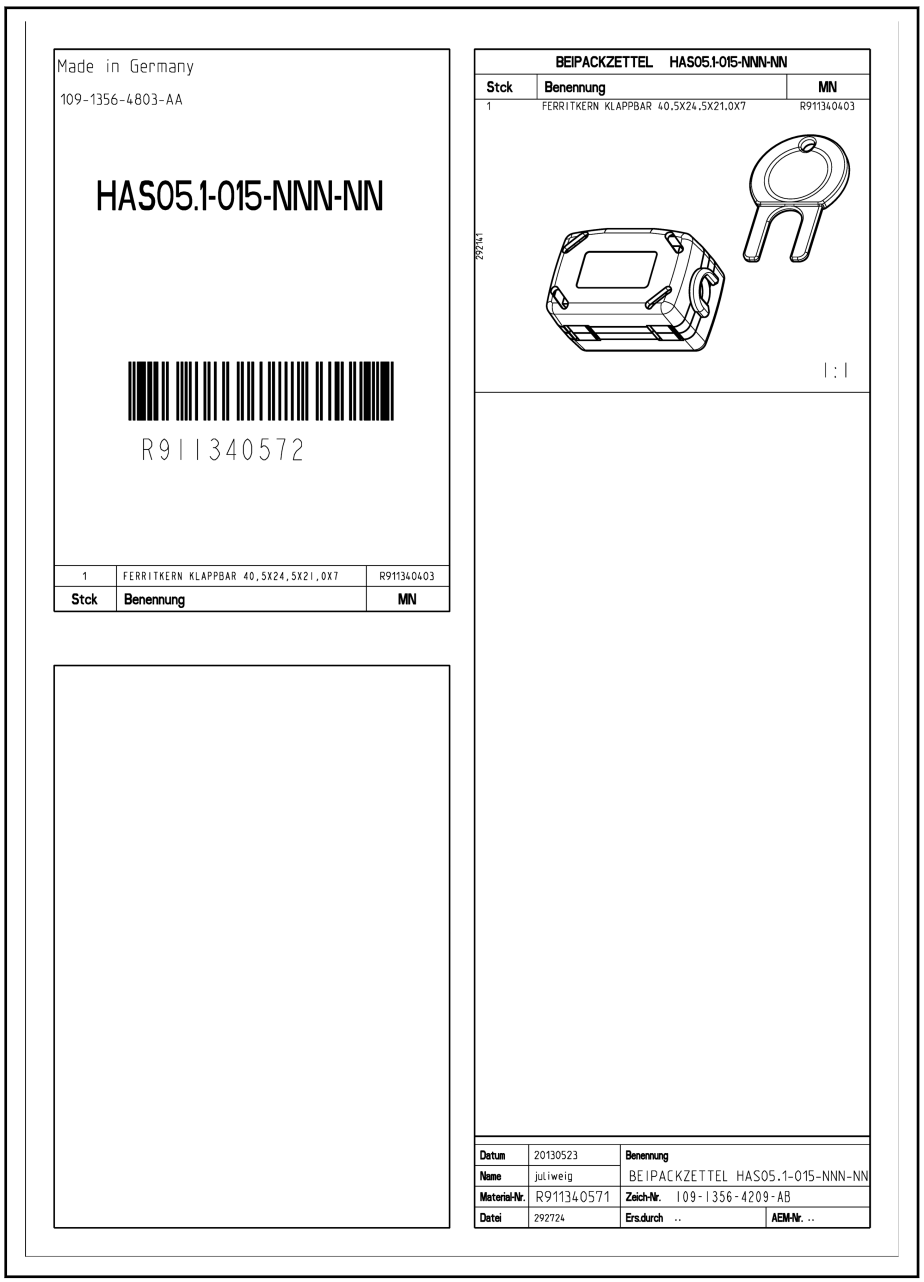

Fig. 8-39: Product insert

Cables, accessories, additional components

Mounting

- Before mounting the snap-on ferrite, store it for at least 1 hour at a temperature of 15 … 25 °C.
- When mounting the snap-on ferrite, avoid putting it under mechanical stress. The housing or the ferrite core might brake.
- Do not mount the snap-on ferrite in the immediate vicinity of strong heat sources. The maximum allowed ambient temperature of the snap-on ferrite is 105 °C.
- Fix the snap-on ferrite within the control cabinet to the cable jacket of the connection line of the braking resistor (see picture). The snap-on ferrite is designed for cable diameters of 6.5 … 7 mm.

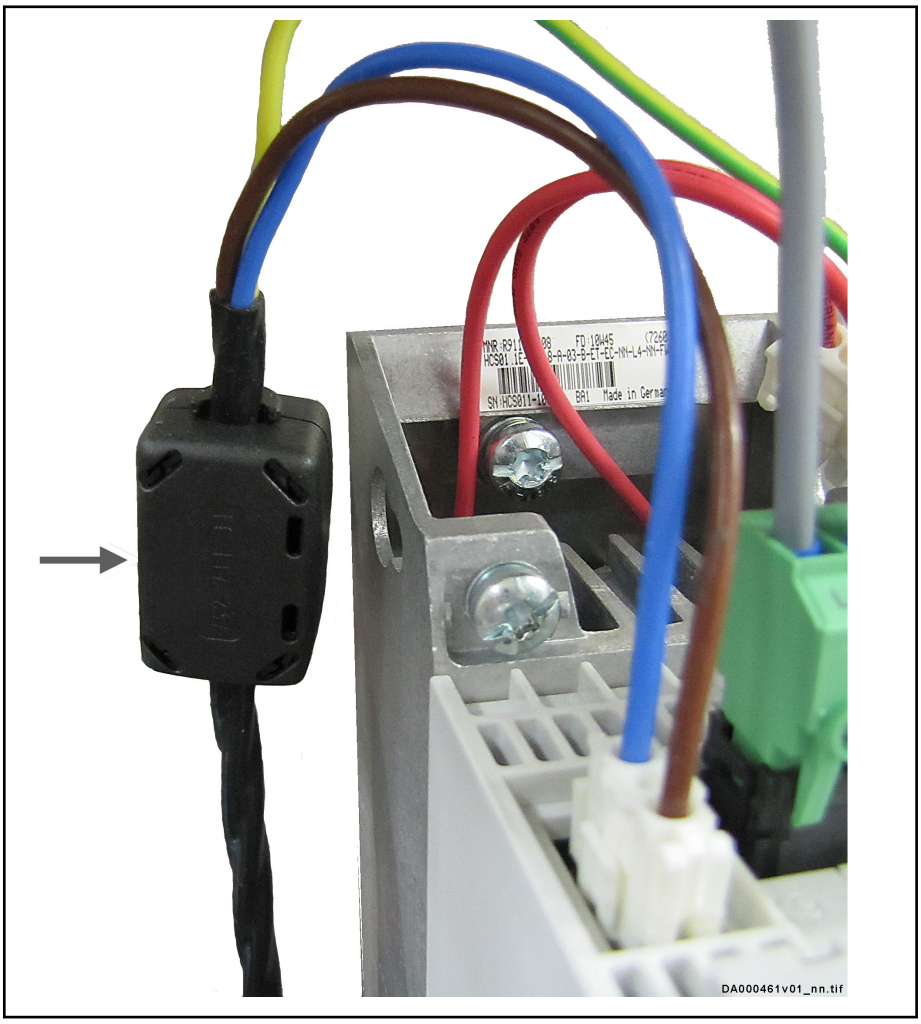

Fig. 8-40: Snap-on ferrite at connection line of external braking resistor

To open the snap-on ferrite, use the proper tool:

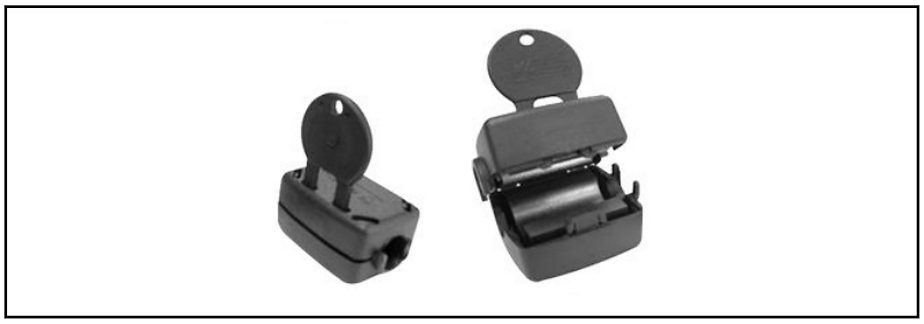

Fig. 8-41: Opening the snap-on ferrite

Cables, accessories, additional components

8.3 Additional components

8.3.1 Transformers

General information

Transformers are only needed when the mains voltage is outside of the allowed nominal voltage of the drive controller.

Grounded mains

For grounded mains, the mains voltage is adjusted to the nominal voltage of the device by means of **autotransformers** which have been sized for **a specific output voltage range**.

Ungrounded mains

For voltage adjustment of ungrounded mains, always connect **isolating transformers** to prevent overvoltages between outer conductor and ground.

Autotransformers for drive controllers

Types

Short type designation	1	2	3	4	5	6	7	8	9	10	11	12	13	14	15	16	17	18	19	20	21	22	23	24	25	26	27	28	29	30	31	32	33	34	35	36	37	38	39	40
Example:	T	R	A	F	O		D	S	T		■	4	,	0	0	/	S	/	3	8	0	,	4	1	5	,	4	4	0	-	2	2	0				1	0	M	M
	①						②				③						④		⑤												⑥						⑦			

①	**Object:** TRAFO = transformer
②	**Product:** DST = AC autotransformer
③	**Nominal power:** ■2,00 = 2.0 kVA ■2,50 = 2.5 kVA ■4,00 = 4.0 kVA ■5,00 = 5.0 kVA ■7,50 = 7.5 kVA
④	**Type of construction (design):** S = upright mounting
⑤	**Nominal input voltage (phase-phase):** e.g., 380,415,440 = AC 380 V, AC 415 V, AC 440 V
⑥	**Nominal output voltage (phase-phase):** e.g., 220 = 230 V
⑦	**Special design:** e.g., 10MM = maximum conductor connection cross section 10 mm^2

Tab. 8-23: DST, type code

Selected transformers

Degree of protection IP00

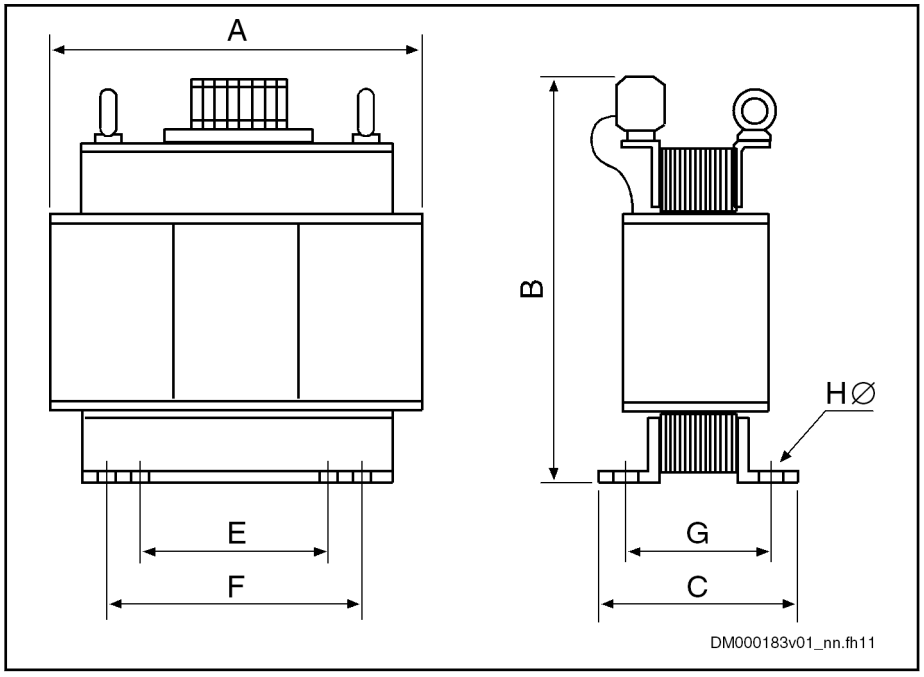

Fig. 8-42: Dimensional drawing

kVA / type of construction / nominal input voltage - nominal output voltage (Material number)	A	B	C	E	F	G	HØ	Terminal connector [mm²]	Weight [kg]
2,00 / S / 380,415,440 - 220 (R911226187)	205	210	120	95	145	85	7×15	4	12
2,50 / S / 380,415,440 - 220 (R911219217)	205	210	130	95	145	95	7×15	6	13
4,00 / S / 380,415 - 220 (R911216703)	240	260	150	110	170	120	11×15	6	24
5,00 / S / 380,415,440 - 220 (R911219831)	300	325	140	140	210	110	11×15	10	31
7,50 / S / 380,415,440 - 220 (R911219497)	300	310	155	140	210	125	11×18	10	36

Tab. 8-24: Data

Cables, accessories, additional components

8.3.2 Mains Filters NFD / NFE

Type Code NFE / NFD

NFE02.1 - Mains Filter, Single-Phase

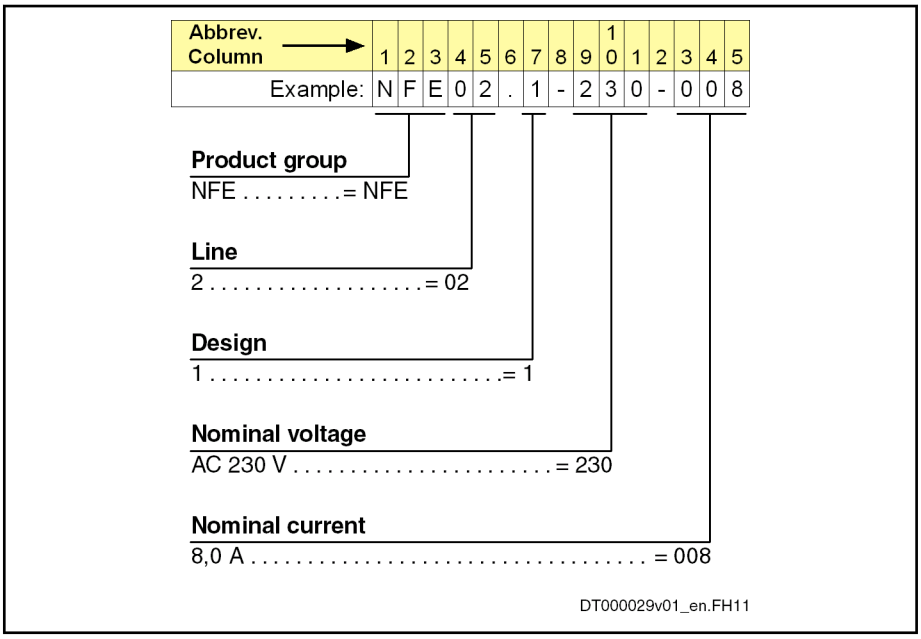

Fig. 8-43: Type Code NFE02.1

NFD03.1 - Mains Filter, Three-Phase

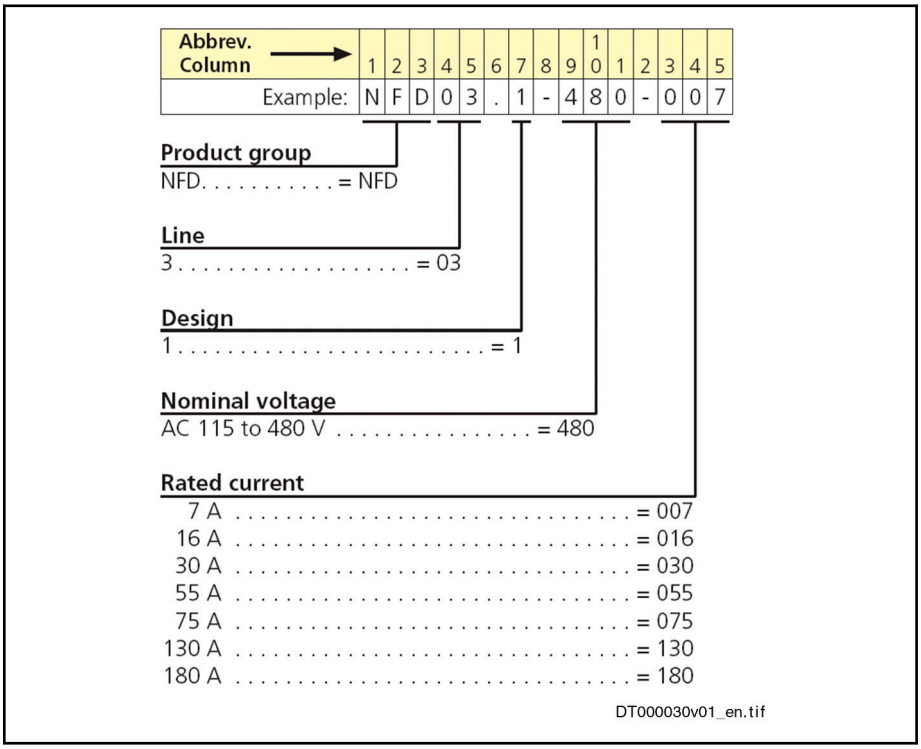

Fig. 8-44: Type Code NFD03.1

Mechanical Data NFE / NFD

NFE02.1

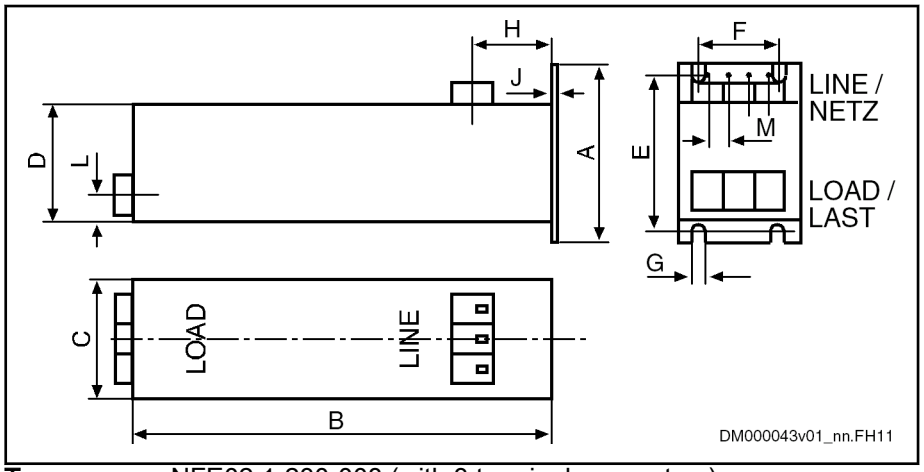

Type NFE02.1-230-008 (with 3 terminal connectors)

Fig. 8-45: Single-Phase Filter NFE02.1 for Drives

Allowed Mounting Positions Every mounting position is allowed.

Cables, accessories, additional components

NFD03.1

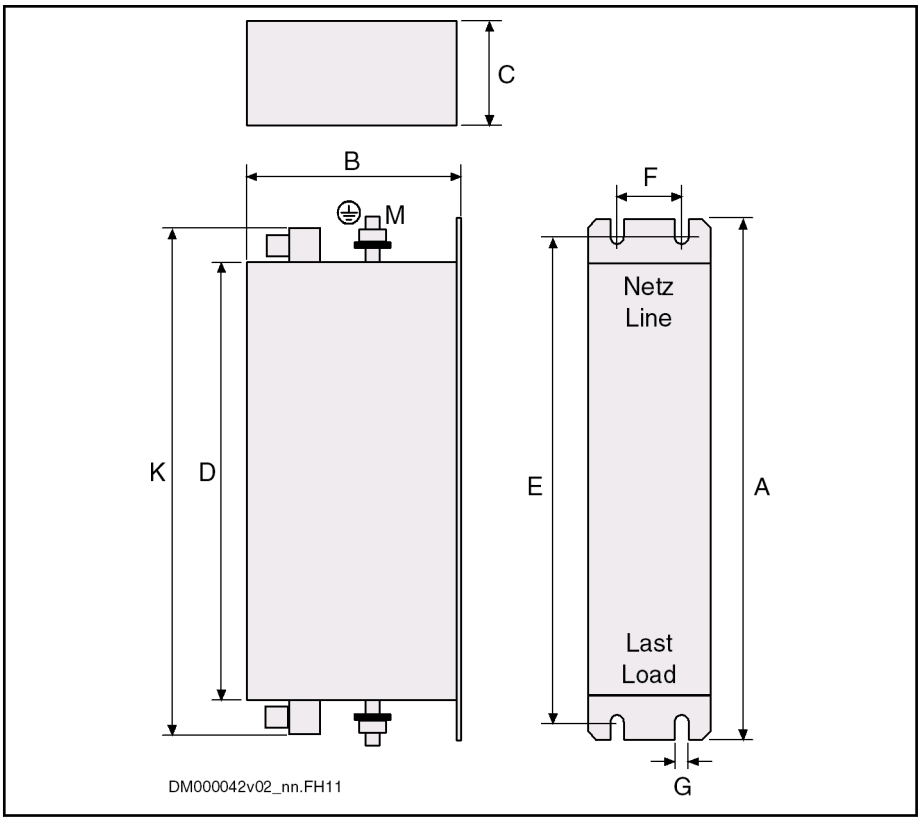

Fig. 8-46: Three-Phase Current Filter NFD03.1 for Drives

Tolerance limits for NFD03.1:

- The dimensions B, C, D, K are maximum values. They can be reduced up to 15 mm.
- The ground studs M can also be arranged horizontally (protruding from the mounting flange), instead of vertically (as illustrated above).

Mains filter type	A	B	C	D	E	F	G	H	J	K	L	M	M_{AE}	M_{AKl}
NFD 03.1-480-007	190	90	50	160	180	20	5,4	-	-	190	-	M5	2,2	0,8
NFD 03.1-480-016	250	90	55	220	235	25	5,4	-	-	250	-	M5	2,2	0,8
NFD 03.1-480-030	270	100	60	240	255	30	5,4	-	-	270	-	M5	2,2	2
NFD 03.1-480-055	250	105	90	220	235	60	5,4	-	-	260	-	M6	4	2,2
NFD 03.1-480-075	270	145	90	240	255	60	6,5	-	-	280	-	M6	4	4,5
NFD 03.1-480-130	270	160	100	240	255	65	6,5	-	-	330	-	M10	18	8
NFD 03.1-480-180	380	180	130	350	365	102	6,5	-	-	455	-	M10	18	20
NFE 02.1-230-008	90	210	60	60	80	40	5,3	40	0,75	-	15	10	0,8	0,8

M_{AE} Maximum tightening torque of the ground stud in Nm
M_{AKl} Maximum tightening torque of the terminal in Nm

Tab. 8-25: Dimensions of the Mains Filters NFD/NFE

Allowed Mounting Positions

Mounting position	Note
G1	Allowed without restrictions
G2	Allowed without restrictions
G3	Mains filter may only be loaded with 80% of the maximum allowed continuous current
G4	Allowed without restrictions
G5	Mains filter may only be loaded with 80% of the maximum allowed continuous current

Tab. 8-26: Allowed Mounting Positions

Electrical Data NFE / NFD

☞ **Using mains filters in mains grounded via outer conductor**

When using mains filters NFD03 in **mains grounded via outer conductor**, use an isolating transformer between mains and mains filter.

Maximum mains connection voltage of mains 50…60 Hz U_N	Nominal mains current I_{nenn} (1)	Number of phases	Mains filter type	Terminal connectors (3)			Power dissipation approx.	Weight	Type of construction
In V	In A			Flexible [mm²]	Rigid [mm²]	AWG	W	kg	
AC 480V +10%	7	3	NFD 03.1-480-007	4 (3)	6 (3)	AWG 12	3,9	0,7	Vertical
AC 480V +10%	16	3	NFD 03.1-480-016	4 (3)	6 (3)	AWG 12	6,4	1,0	Vertical
AC 480V +10%	30	3	NFD 03.1-480-030	10	16	AWG 6	11,9	1,4	Vertical
AC 480V +10%	55	3	NFD 03.1-480-055	16	25	AWG 4	25,9	2,0	Vertical
AC 480V +10%	75	3	NFD 03.1-480-075	25	35	AWG 3	30,4	3,5	Vertical
AC 480V +10%	130	3	NFD 03.1-480-130	50	50	AWG 1/0	38	4,7	Vertical
AC 480V +10%	180	3	NFD 03.1-480-180	95	95	AWG 4/0	61	10	Vertical

Cables, accessories, additional components

Maximum mains connection voltage of mains 50…60 Hz U_N	Nominal mains current I_{nenn} (1)	Number of phases	Mains filter type	Terminal connectors (3)			Power dissipation approx.	Weight	Type of construction
AC 230V +10%	7,5	1	NFE 02.1-230-008	4 (3)	6 (3)	AWG 10	7,2	1,1	Vertical

NFD Three-phase filter
NFE Single-phase filter
(1) Mains-side maximum continuous current at 45 °C ambient temperature
(2) Only use for interference suppression of the power supply unit NTM
(3) For the equipment grounding conductor, connect a conductor cross section of 10 mm2 by means of terminal pin or ring cable lug

Tab. 8-27: Technical data

Operating frequency	From 0-60 Hz at 45 °C
Power dissipation	Measured 2 or 3 × $RI^2_{Nenn\ DC}$
Temperature range	-25 … +85 °C
Overload	1.5 × I_{Nenn} 1 minute per hour or 4 × I_{Nenn} for 10 s
Effective attenuation	Frequency range 0.15-30 MHz
Saturation behavior	Reduction of filter attenuation by 6 dB at 2.5-fold to 3-fold nominal current
Test voltage	L/N → PE or L → PE: 2000 V, 50 Hz, 2 s at 25 °C L/ N → L: DC 1,100 V, 2 s at 25 °C
Current reduction in the case of overtemperature	See formula for reduction in chapter "Calculations"
Leakage current at 50 Hz	Symmetrical three-phase operation: Typ. 30 mA Single-phase operation or in the case of tripped fuses of a phase: Typ. 175 … 190 mA
Degree of protection	IP 20

Tab. 8-28: Technical Data

8.3.3 Mains chokes

Type code

Short type designation →	1	2	3	4	5	6	7	8	9	10	11	12	13	14	15	16	17	18	19	20	21	22	23	24	25	26	27	28	29	30	31	32	33	34	35	36	37	38	39	40
Example:	H	N	L	0	1	.	1	E	-	0	9	8	0	-	N	0	0	2	6	-	A	-	4	8	0	-	N	N	N	N											

Product
HNL . . . . . = HNL

Line
1. . . . . = 01

Design
1 . . . . . = 1

Supply system
Feeding . . . . . = E
Regenerative . . . . . = R
Feeding and regenerative . . . . = D

Nominal inductance
e.g. 980 µH . . . . . = 0980

Additional option
With capacitors . . . . . = C
Current-compensated . . . . . = S
None. . . . . = N

Nominal current
e.g. 26 A . . . . . = 0026

Degree of protection
IP10 . . . . . = A
IP00 . . . . . = N

Mains connection voltage
3 x AC 380V -10% ... 3 x AC 600V +20%. . . . . = 380
3 x AC 400…480V -15+10%, 50/60 Hz. . . . . = 480
3 x AC 400…500V -15+10%, 50/60 Hz. . . . . = 500
3 x AC 380V -15%...3 x 690V +10%. . . . . = 690

Other design
Reduced height with lateral connection. . . . . = NNNA
With damping by means of thyristor circuit. . . . . = NNND
Liquid cooling . . . . . = NNNF
None. . . . . = NNNN

Standard reference

Standard	Title	Edition
DIN EN 60529	Degrees of protection provided by enclosures (IP code)	2000-09

DT000031v05_en.FH11

Fig. 8-47: Type code

Cables, accessories, additional components

Type plate

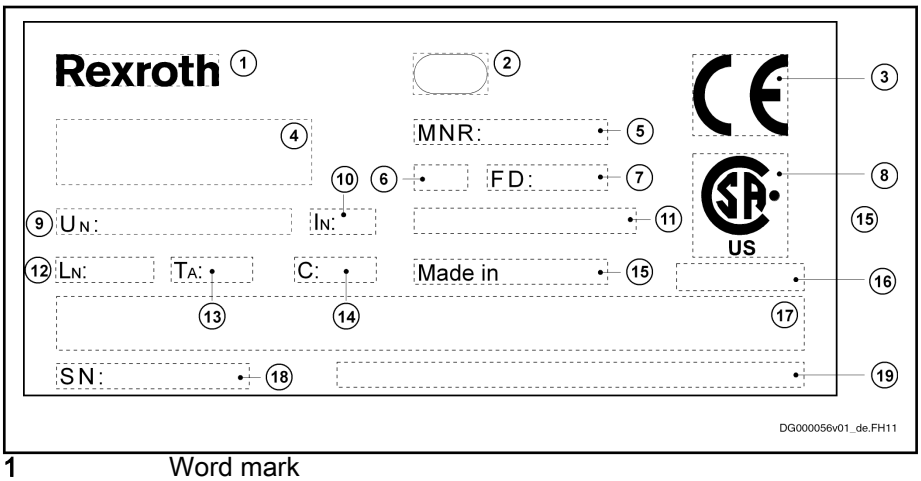

1	Word mark
2	Business facility number
3	CE label
4	Type designation (two lines, 20 characters each)
5	Part number
6	Change release
7	Production date (YYWww)
8	Certification label
9	Nominal voltage / frequency
10	Nominal current
11	Number of design specification
12	Nominal inductance
13	Temperature
14	Number and value of additional capacitors
15	Designation of origin
16	Approval number
17	Bar code (39 or 93)
18	Serial number
19	Company address

Fig. 8-48: Type plate

HNL01.1E - mains chokes, feeding

Technical data

Mechanics and mounting

Type 1 dimensions:

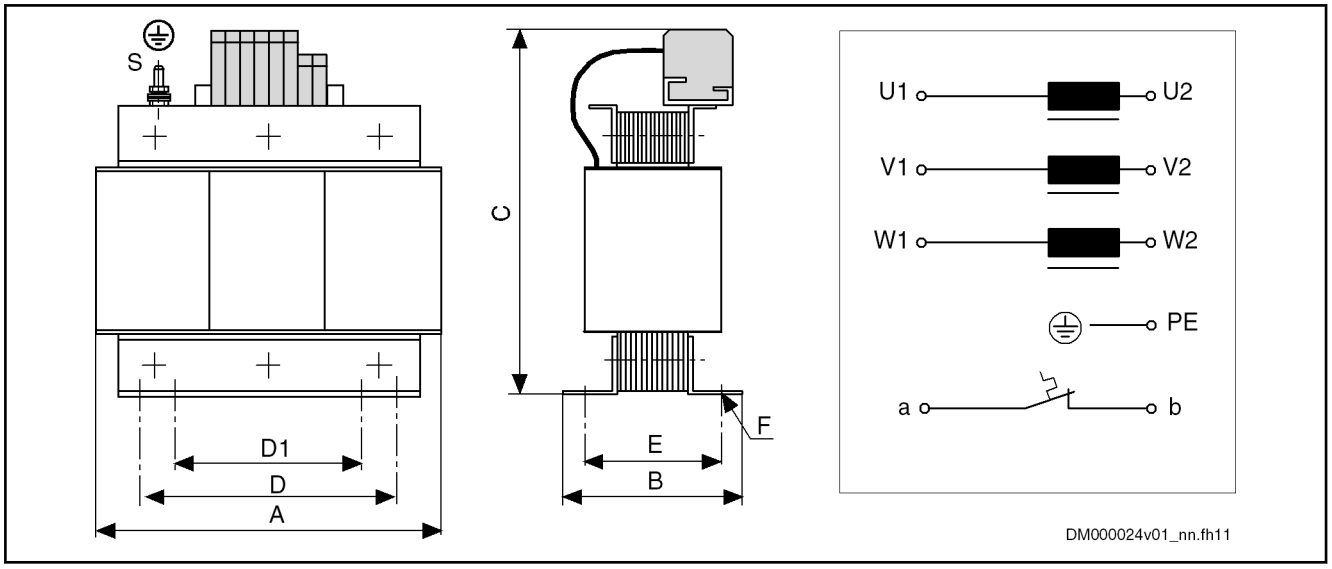

Fig. 8-49: Type 1 dimensions

Mains choke	Type	Dimensions [mm]										Weight [kg]
		A	B	C	D	D1	E	F 1)	G	H	S	
HNL01.1E-1000-N0012-A-500-NNNN	1	120	61	164	81	-	44	6.4 × 11	-	-	M5	2.7
HNL01.1E-0600-N0032-A-500-NNNN	1	150	66.5	185	113	-	49.5	6.4 × 11	-	-	M5	4.5

1) Long hole in "B" direction

Tab. 8-29: Dimensions, weight

Mains choke	Connection cross section mm² / AWG		Tightening torque Nm	
	U1, V1, W1 U2, V2, W2	a, b	U1, V1, W1 U2, V2, W2	a, b
HNL01.1E-1000-N0012-A-500-NNNN	4	4	Observe the data imprinted on the component.	
HNL01.1E-0600-N0032-A-500-NNNN	10	4		

Tab. 8-30: Connection cross section, tightening torque

Basic data

Mains choke	U_N [V]	I_N [A]	L_N [µH]	P_V [W]	I_{max} [A]	L_{min} At I_{max}
HNL01.1E-1000-N0012-A-500-NNNN	500	12	3 × 1000	40	25	50% of LN
HNL01.1E-0600-N0032-A-500-NNNN	500	32	3 × 600	75	80	50% of LN

Tab. 8-31: Electrical data

Cables, accessories, additional components

Temperature contact a, b

Switching capacity	Switching temperature
1 A / AC 250 V DC 24 V	125 °C HNL01.1E mains chokes of type 1 are equipped with a temperature contact (a, b), types 2, 3 and 4 are not.

Tab. 8-32: Temperature contact

8.3.4 External braking resistors HLR

Types

Abbrev. column	1	2	3	4	5	6	7	8	9	10	11	12	13	14	15	16	17	18	19	20	21	22	23	24	25	26	27	28	29	30
Example:	H	L	R	0	1	.	2	N	-	0	1	K	0	-	N	6	8	R	0	-	E	-	0	0	7	-	N	N	N	N

Product
HLR . . . . . = HLR

Line
1. . . . . = 01

Design
2 . . . . . = 2

Type of construction
Version for device mounting . . . = A
Version for free assembly . . . . . = N

Continuous power
e.g. 1 kW . . . . . = 01K0

Additional option
None. . . . . = N

Resistance value
e.g. 68 ohm . . . . . = 68R0

Degree of protection
IP54 . . . . . = E

Nominal DC bus voltage
DC 300 V . . . . . = 003
DC 700 V . . . . . = 007

Other design
None . . . . . = NNNN

Standard reference

Standard	Title	Edition
DIN EN 60529	Degree of protection provided by enclosures (IP code)	2000-09

DT000077v02_en.fh11

Fig. 8-50: Type code

Data

Technical data - currents, voltages, power

Description	Symbol	Unit	HLR01.2N-01K0-N28R0-E-007-NNNN Preliminary	HLR01.2N-01K0-N68R0-E-007-NNNN Preliminary	HLR01.2N-0K06-N100R-E-003-NNNN	HLR01.2N-0K06-N180R-E-007-NNNN
Degree of protection according to IEC 60529	IP		IP54			
Ambient temperature range for operation with nominal data	T_{a_work}	°C	0...40			
						Last modification: 2014-05-26

Cables, accessories, additional components

Description	Symbol	Unit	HLR01.2N-01K0-N28R0-E-007-NNNN Preliminary	HLR01.2N-01K0-N68R0-E-007-NNNN Preliminary	HLR01.2N-0K06-N100R-E-003-NNNN	HLR01.2N-0K06-N180R-E-007-NNNN
Mass	m	kg	3.96		0.52	
Nominal braking resistor	$R_{DC\_Bleeder}$	ohm	28.00	68.00	100.00	180.00
Braking resistor continuous power	P_{BD}	kW	1.00		0.06	
Braking resistor peak power	P_{BS}	kW	25.82	8.96	1.38	3.39
Regenerative power to be absorbed	W_{R_max}	kWs	30.00	10.00	1.00	2.40
Maximum allowed on-time duty	t_{on_max}	s	1.16	1.11	0.72	0.71
Minimum allowed cycle time	T_{cycl}	s	33.30	9.90	16.50	40.10
Cooling type			natural			
Volumetric capacity of forced cooling	V	m^3/h	-			
Temperature increase with minimum distances d_{bot}; d_{top}; P_{BD}	ΔT	K	-			
Minimum distance on the top of the device[1)]	d_{top}	mm	200		150	
Minimum distance on the bottom of the device[2)]	d_{bot}	mm	200		150	
Horizontal spacing on the device[3)]	d_{hor}	mm	200		50	
Allowed range tightening torque	M	Nm	-			
Required wire size in accordance with NFPA 79 and UL 508 A (internal wiring);[4)]	A_{LN}	AWG	16			
						Last modification: 2014-05-26

1) 2) 3) See fig. "Air intake and air outlet at device"
4) Copper wire; PVC-insulation (conductor temperature 90 °C); table 28.1; $T_a \leq 40$ °C

Tab. 8-33: HLR - technical data - currents, voltages, power

HLR01.2N-01K0-N28R0, ...-N68R0 dimensions

Boring dimensions

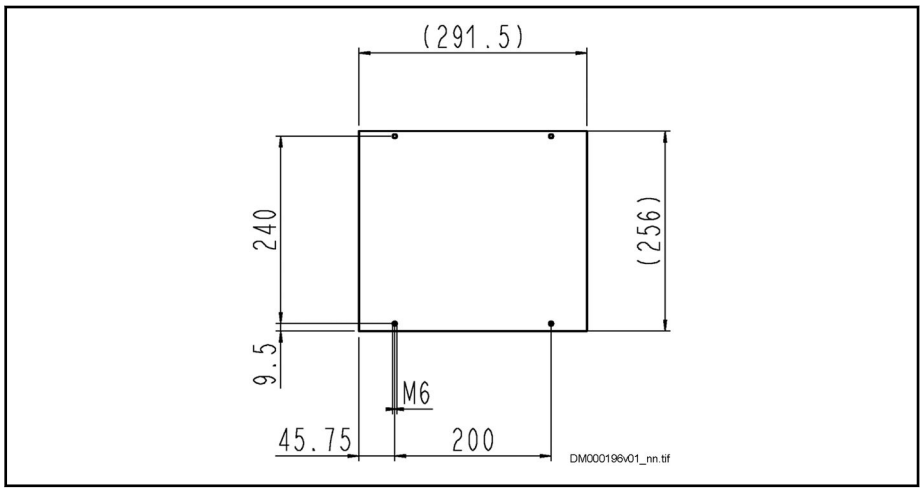

Fig. 8-51: Boring dimensions

Dimensions (with suspended mounting)

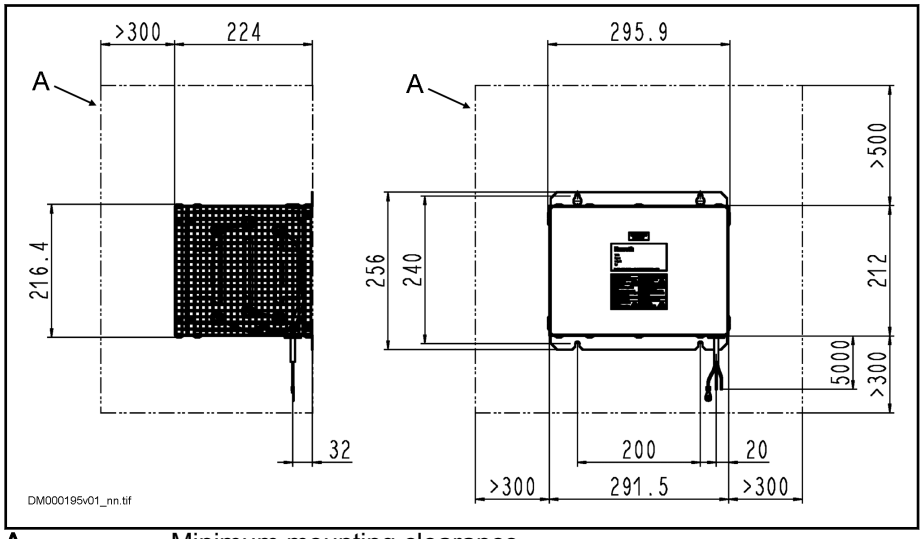

A Minimum mounting clearance

Fig. 8-52: Dimensions (with suspended mounting on the wall)

Cables, accessories, additional components

Dimensions (with upright mounting)

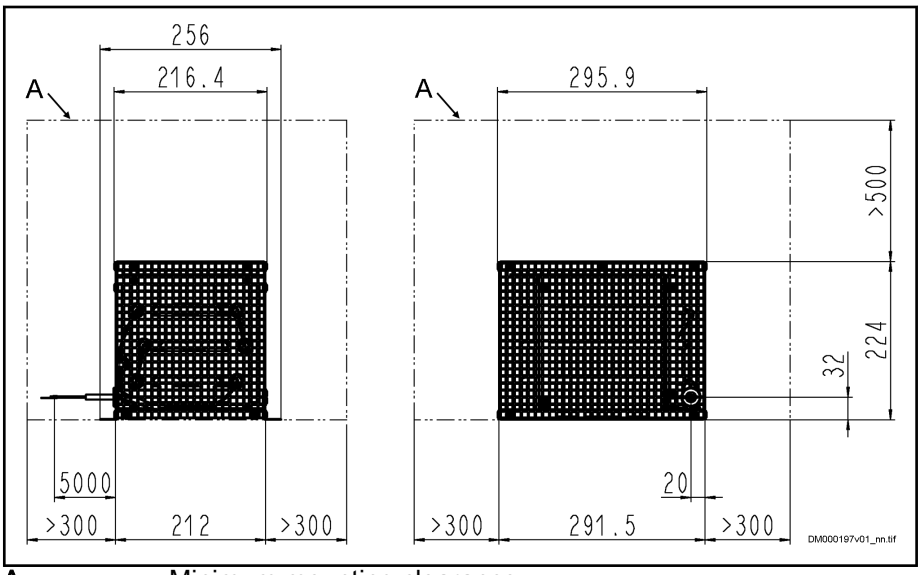

A Minimum mounting clearance

Fig. 8-53: Dimensions (with upright mounting on the floor)

HLR01.2N-0K06-N100R, ...-N180R dimensions

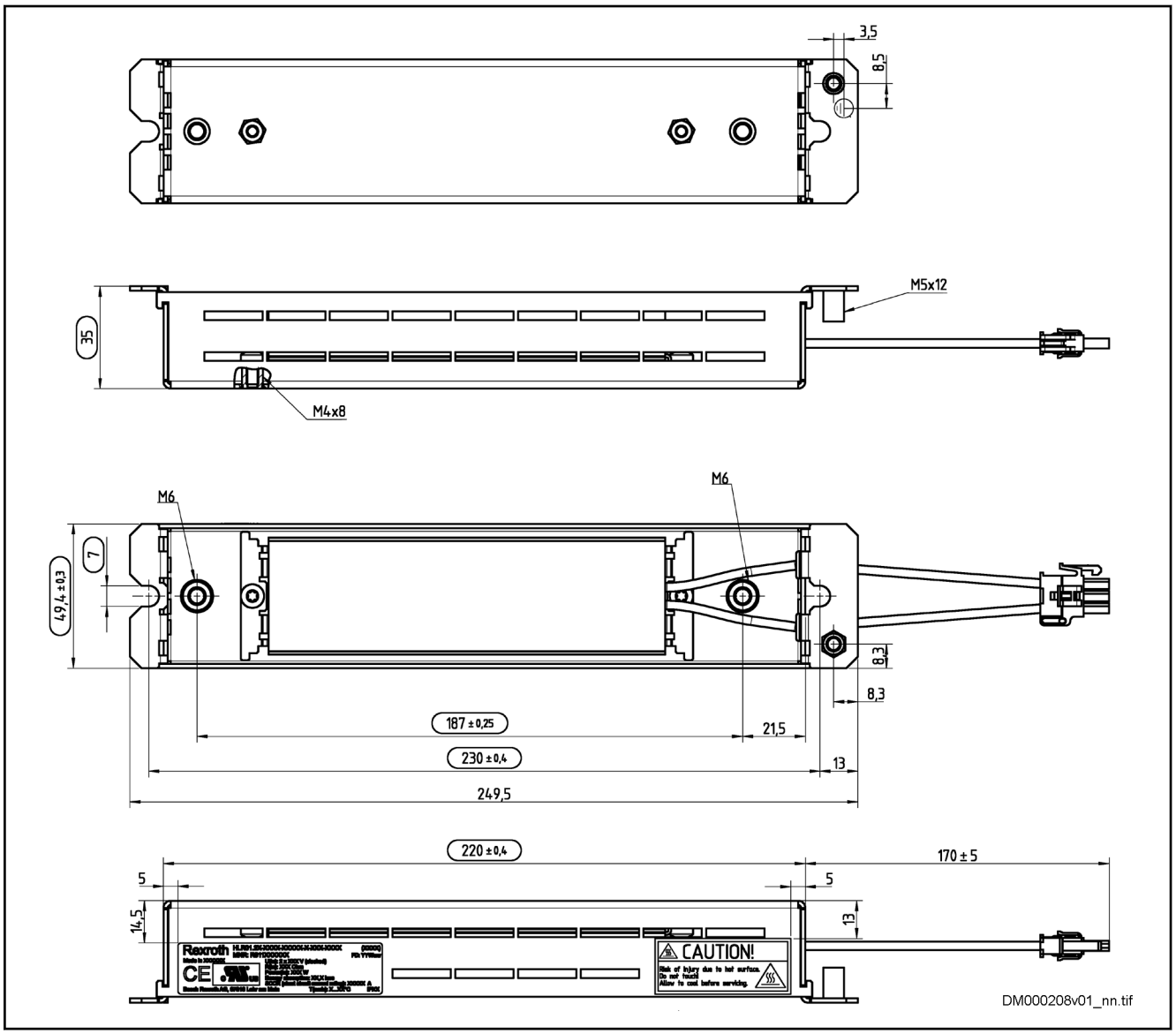

Fig. 8-54: Dimensions

Connector	Data
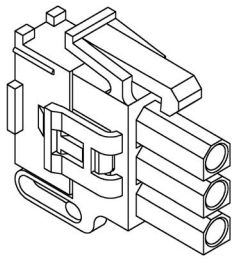	Manufacturer: TE connectivity Ltd.
	Type: Mini-Universal MATE-N-LOK 2
	Number: 794186-1
	Contacts (female): • Number: 794223-1 • Connection cross section: 0.5 … 1.4 mm^2 (16 … 20 AWG)

Tab. 8-34: Connector

Cables, accessories, additional components

Assignment HLR01.2 to HCS01

Braking resistor HLR01.2N-…	Drive controller HCS01.1E-W00…
0K06-N100R-E-003	03, 06, 09, 13
0K06-N180R-E-007	05, 08
01K0-N68R0-E-007	18-02
	18-03, 28
01K0-N28R0-E-007	54

Tab. 8-35: Assignment HLR01.2 to HCS01

Installation

Connection

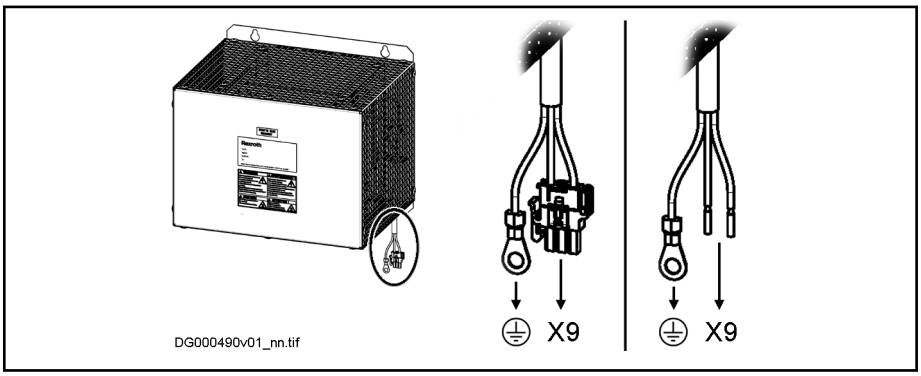

Fig. 8-55: Connection

When installing the braking resistor, observe the instructions given in the description of connection point X9.

Snap-on ferrite

The accessory HAS05.1-015-NNN-NN (snap-on ferrite) ensures that Class C3 of the EMC Directive EN 61800-3 is complied with for braking resistors installed outside of the control cabinet.

The snap-on ferrite is designed for the following components:

- HCS01.1E-W00**18** + HLR01.2N-01K0-N**68**R0-E-007
- HCS01.1E-W00**28** + HLR01.2N-01K0-N**68**R0-E-007
- HCS01.1E-W00**54** + HLR01.2N-01K0-N**28**R0-E-007

Bimetal protection relay

Using a bimetal protection relay you can establish overload protection for external braking resistors.

Integrate the isolated N/C contact of the relay in the control circuit for mains connection. See also chapter "Control Circuit for the Mains Connection" on page 104.

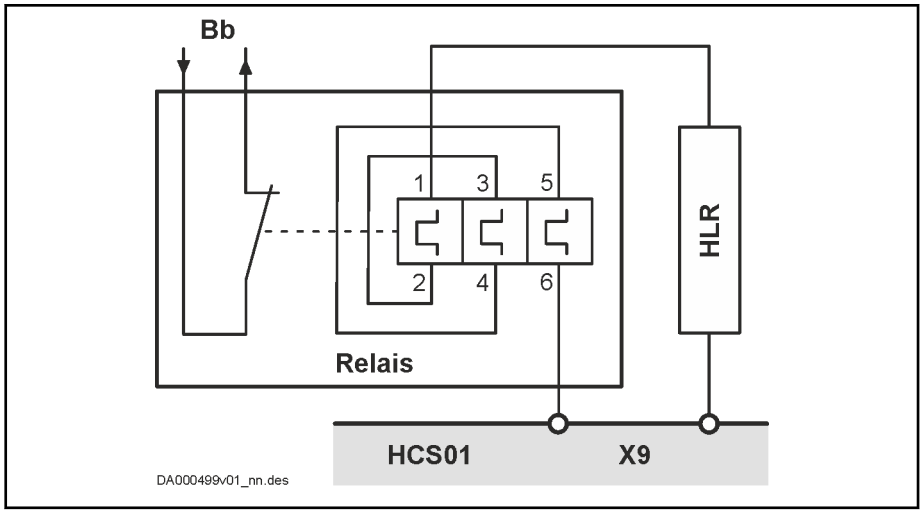

Fig. 8-56: Bimetal protection relay as overload protection

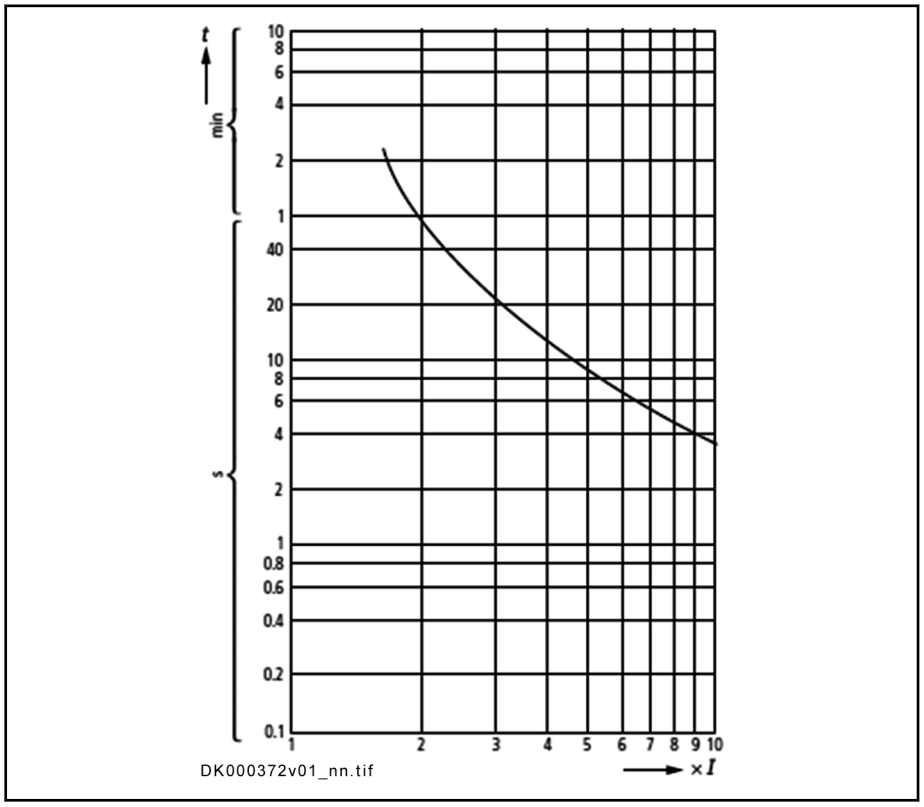

Fig. 8-57: Tripping characteristic of bimetal protection relay

Braking resistor HLR01.2N-…	Current measuring range [A]	Tripping current [A]
01K0-N28R0-E-007	4 … 6	6
01K0-N68R0-E-007	4 … 6	4

Cables, accessories, additional components

Braking resistor HLR01.2N-…	Current measuring range [A]	Tripping current [A]
0K06-N100R-E-003	0.6 … 1	0.8
0K06-N180R-E-007	0.6 … 1	0.6

Tab. 8-36: HLR and bimetal protection relay: Current measuring range and tripping current

8.3.5 DC bus capacitor units HLC

Type code

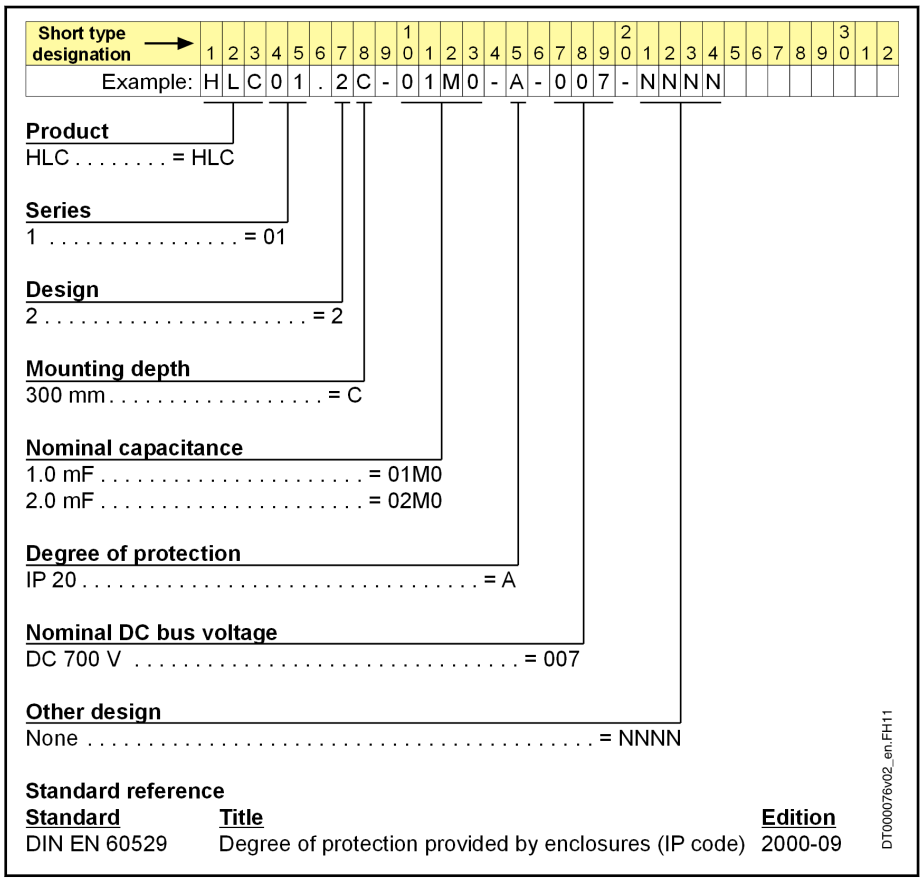

Fig. 8-58: Type code

Technical data

Technical data

Description	Symbol	Unit	HLC01.2C-01M0	HLC01.2C-02M0
Allowed mounting position			G1	
Mass	m	kg	2.2	2.7
Allowed input voltage	U_{DC}	V	DC 254 … 750	
DC bus capacitance	C_{DC}	mF	1 ±20%	2 ±20%
Power dissipation at continuous current and continuous DC bus power respectively (UL)	P_{Diss_cont}	W	4.10	5.28
Maximum discharge time from $U_{R\_DC\_On}$ to DC 50 V	t_{entl_ZK}	sec	238	378
Allowed input current at L+ L-	$I_{max(rms)}$	A	15	30
Insulation resistance (at DC 500 V)	R_{is}	Mohm	> 10	> 10
Cooling			Natural convection	

Tab. 8-37: HLC - technical data

Cables, accessories, additional components

Dimensions

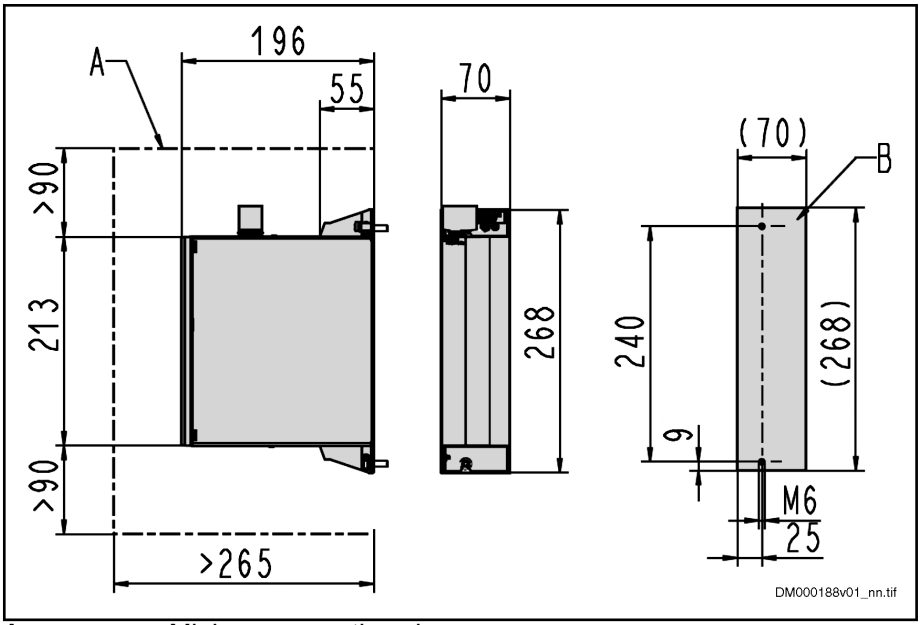

A Minimum mounting clearance
B Boring dimensions

Fig. 8-59: Dimensions

Connection

⚠ WARNING **Lethal electric shock by live parts with more than 50 V!**

Before working on live parts: De-energize installation and secure power switch against unintentional or unauthorized re-energization.

Wait at least **30 minutes** after switching off the supply voltages to allow **discharging**.

Check whether voltage has fallen below 50 V before touching live parts!

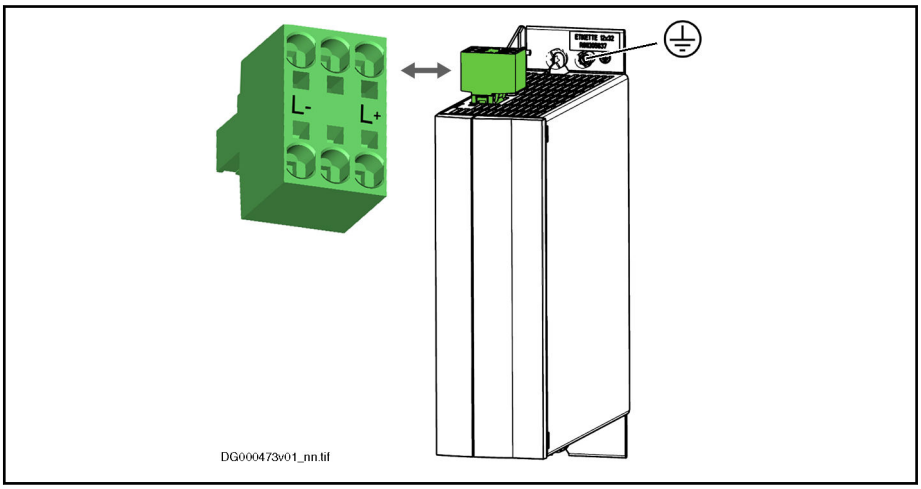

Fig. 8-60: Connection points (DC Bus (L+ L-), equipment grounding conductor)

Equipment grounding conductor

Connect the equipment grounding conductor via thread **M5** to the housing of the device (identification mark ⏚; tightening torque: **5 Nm**). The **M5×12** screw required for this purpose is part of the supplied accessories HAS09.

DC bus

Connect HLC01 to HCS01 with twisted lines: L+ to L+; L- to L-

Technical data of the connection point: See description of connection point X77.

Arrangement

Place the HLC next to the most powerful drive controller of a drive system.

Operation

Mains Choke

Always operate the DC bus capacitor units together with the mains choke assigned to the drive controller (see chapter 7.3.2 "Mains voltage" on page 233).

Special case "HCS01.1E-W0018-_-03" (in the technical data, no mains choke has been assigned to this drive controller):

Use the mains choke "HNL01.1E-1000-N0012-A-500-NNNN".

DC bus coupling

Information on DC bus coupling: See chapter "DC Bus Capacitor Unit" on page 111

9 Environmental protection and disposal

9.1 Environmental protection

Production processes

The products are made with energy- and resource-optimized production processes which allow re-using and recycling the resulting waste. We regularly try to replace pollutant-loaded raw materials and supplies by more environment-friendly alternatives.

No release of hazardous substances

Our products do not contain any hazardous substances which may be released in the case of appropriate use. Normally, our products will not have any negativ influences on the environment.

Significant components

Basically, our products contain the following components:

Electronic devices
- steel
- aluminum
- copper
- synthetic materials
- electronic components and modules

Motors
- steel
- aluminum
- copper
- brass
- magnetic materials
- electronic components and modules

9.2 Disposal

Return of products

Our products can be returned to our premises free of charge for disposal. It is a precondition, however, that the products are free of oil, grease or other dirt.

Furthermore, the products returned for disposal must not contain any undue foreign material or foreign components.

Send the products ”free domicile” to the following address:

Bosch Rexroth AG
Electric Drives and Controls
Buergermeister-Dr.-Nebel-Strasse 2
97816 Lohr am Main, Germany

Packaging

The packaging materials consist of cardboard, wood and polystyrene. These materials can be recycled anywhere without any problem.

For ecological reasons, please refrain from returning the empty packages to us.

Batteries and accumulators

Batteries and accumulators can be labeled with this symbol.

The symbol indicating "separate collection" for all batteries and accumulators is the crossed-out wheeled bin.

The end user within the EU is legally obligated to return used batteries. Outside the validity of the EU Directive 2006/66/EC keep the stipulated directives.

Used batteries can contain hazardous substances, which can harm the environment or the people´s health when they are improper stored or disposed of.

After use, the batteries or accumulators contained in Rexroth products have to be properly disposed of according to the country-specific collection.

Recycling

Most of the products can be recycled due to their high content of metal. In order to recycle the metal in the best possible way, the products must be disassembled into individual modules.

Metals contained in electric and electronic modules can also be recycled by means of special separation processes.

Products made of plastics can contain flame retardants. These plastic parts are labeled according to EN ISO 1043. They have to be recycled separately or disposed of according to the valid legal requirements.

10 Service and support

Our worldwide service network provides an optimized and efficient support. Our experts offer you advice and assistance should you have any queries. You can contact us **24/7**.

Service Germany

Our technology-oriented Competence Center in Lohr, Germany, is responsible for all your service-related queries for electric drive and controls.

Contact the **Service Hotline** and **Service Helpdesk** under:

Phone:	**+49 9352 40 5060**
Fax:	**+49 9352 18 4941**
E-mail:	service.svc@boschrexroth.de
Internet:	http://www.boschrexroth.com/

Additional information on service, repair (e.g. delivery addresses) and training can be found on our internet sites.

Service worldwide

Outside Germany, please contact your local service office first. For hotline numbers, refer to the sales office addresses on the internet.

Preparing information

To be able to help you more quickly and efficiently, please have the following information ready:

- Detailed description of malfunction and circumstances
- Type plate specifications of the affected products, in particular type codes and serial numbers
- Your contact data (phone and fax number as well as your e-mail address)

11 Appendix

11.1 Dimensioning the line cross sections and fuses

Dimensioning the line cross sections and fuses in the supply feeder and branches to the drive system:

1. Determine current in supply feeder of drive system and correct it with correction factors for ambient temperature and bundling.

   (In the technical data of the components in section "Data for mains voltage supply", you can find standardized data for connection cross section and mains circuit breaker at operation under rated conditions.)
2. Determine country of use ("international except for USA/Canada" or "USA/Canada")
3. Determine installation type (e.g., B1 or B2)
4. In "Current carrying capacity" table row, select the value that is immediately above the value determined in the first step
5. In "Fuse" table row, read corresponding fuse
6. In "Cross section A …" table row, read corresponding required cross section

International except for USA/ Canada; installation type B1

Country of use: international except for USA/Canada				
Fuse I_N [A]			Current carrying capacity (× 0.87) $I_{Z(40)}$ [A]	Cross section A [mm²] Installation type B1
1 ×	2 ×	3 ×		
2			1.6	1.5
4			3.3	1.5
6			5.0	1.5
10			8.6	1.5
16			10.3	1.5
16			13.5	1.5
20			18.27	2.5
35			24.36	4
35			31.32	6
50			43.50	10
80			59.16	16
100			77.43	25
125			95.70	35
160			116.58	50
200			148.77	70
200			180.09	95
250			207.93	120
250			227.94	150

Appendix

Country of use: international except for USA/Canada				
Fuse I_N [A]			Current carrying capacity (× 0.87) $I_{Z(40)}$ [A]	Cross section A [mm²] Installation type B1
1 ×	2 ×	3 ×		
315			257.52	185
355			301.02	240
400			342.78	300
315	160		238.03	2 × 70
400	160		288.14	2 × 95
400	200		332.69	2 × 120
400	200		364.70	2 × 150
500	250		412.03	2 × 185
630	315		481.63	2 × 240
630	315		548.45	2 × 300
400		125	312.42	3 × 70
500		160	378.19	3 × 95
500		160	436.65	3 × 120
630		200	478.67	3 × 150
630		200	540.79	3 × 185
800		250	632.14	3 × 240
800		315	719.84	3 × 300

Tab. 11-1: Line cross sections and fuses, B1 according to EN 60204-1:2006, Table 6, for 150mm² and more DIN IEC 60364-5-52:2004, Table B. 52-4

International except for USA/ Canada; installation type B2

Country of use: international except for USA/Canada				
Fuse I_N [A]			Current carrying capacity (× 0.87) $I_{Z(40)}$ [A]	Cross section A [mm²] Installation type B2
1 ×	2 ×	3 ×		
2			1.6	0.75
4			3.3	0.75
6			5.0	0.75
10			8.5	0.75
16			10.1	1.0
16			13.05	1.5
20			17.40	2.5
25			23.49	4
35			29.58	6
50			40.02	10

Country of use: international except for USA/Canada				
Fuse I_N [A]			Current carrying capacity (× 0.87) $I_{Z(40)}$ [A]	Cross section A [mm²] Installation type B2
1 ×	2 ×	3 ×		
63			53.94	16
80			69.60	25
100			86.13	35
125			102.66	50
160			129.63	70
200			155.73	95
200			179.22	120
224			195.75	150
250			221.85	185
315			258.39	240
355			294.93	300
	125		207.41	2 × 70
	160		249.17	2 × 95
	160		286.75	2 × 120
	200		313.20	2 × 150
	200		354.96	2 × 185
	250		413.42	2 × 240
	315		471.89	2 × 300
		100	272.22	3 × 70
		125	327.03	3 × 95
		160	376.36	3 × 120
		160	411.08	3 × 150
		200	465.89	3 × 185
		200	542.62	3 × 240
		250	619.35	3 × 300

Tab. 11-2: Line cross sections and fuses, B2 according to EN 60204-1:2006, Table 6, for 150mm² and more DIN IEC 60364-5-52:2004, Table B. 52-4

International except for USA/ Canada; installation type E

Country of use: international except for USA/Canada				
Fuse I_N [A]			Current carrying capacity (× 0.87) $I_{Z(40)}$ [A]	Cross section A [mm²] Installation type E
1 ×	2 ×	3 ×		
2			1.6	2
4			3.3	4

Appendix

Country of use: international except for USA/Canada				
Fuse I_N [A]			Current carrying capacity (× 0.87) $I_{Z(40)}$ [A]	Cross section A [mm²] Installation type E
1 ×	2 ×	3 ×		
6			5.0	6
10			8.3	10
16			10.4	16
16			12.4	16
20			16.10	1.5
25			21.75	2.5
35			29.58	4
50			37.41	6
63			52.20	10
80			69.60	16
100			87.87	25
125			109.62	35
160			133.11	50
200			170.52	70
250			207.06	95
315			240.12	120
355			277.53	150
400			316.68	185
425			374.10	240
500			432.39	300
	160		272.83	2 x 70
	200		331.30	2 x 95
	250		384.19	2 x 120
	250		444.05	2 x 150
	315		506.69	2 x 185
	400		598.56	2 x 240
	400		691.82	2 x 300
		160	358.09	3 x 70
		200	434.83	3 x 95
		200	504.25	3 x 120
		250	582.81	3 x 150
		250	665.03	3 x 185

Appendix

Country of use: international except for USA/Canada				
Fuse I_N [A]			Current carrying capacity (× 0.87) $I_{Z(40)}$ [A]	Cross section A [mm²] Installation type E
1 ×	2 ×	3 ×		
		315	785.61	3 x 240
		400	908.02	3 x 300

Tab. 11-3: Line cross sections and fuses, E according to EN 60204-1:2006, Table 6, for 150mm² and more DIN IEC 60364-5-52:2004, Table B. 52-10

USA/Canada; installation type E

Country of use: USA/Canada					
Fuse I_N				Current carrying capacity I_Z [A]	Cross section A Installation type E
1 ×	2 ×	3 ×	4 ×		
2				1.6	14 AWG
4				3.3	14 AWG
6				5	14 AWG
10				8.3	14 AWG
16				13	14 AWG
20				15	14 AWG
25				20	12 AWG
40				30	10 AWG
70				50	8 AWG
80				65	6 AWG
100				85	4 AWG
110				100	3 AWG
125				115	2 AWG
150				130	1 AWG
175				150	1/0 AWG
200				175	2/0 AWG
225				200	3/0 AWG
250				230	4/0 AWG
300				255	250 kcmil
300				285	300 kcmil
350				310	350 kcmil
350				335	400 kcmil
400				380	500 kcmil
450				420	600 kcmil
600				460	700 kcmil

Appendix

Country of use: USA/Canada					
Fuse I_N				Current carrying capacity I_Z [A]	Cross section A Installation type E
1 ×	2 ×	3 ×	4 ×		
600				475	750 kcmil
600				490	800 kcmil
600				520	900 kcmil
800				545	1000 kcmil
800				590	1250 kcmil
800				625	1500 kcmil
800				650	1750 kcmil
800				665	2000 kcmil
	200			300	2 × 1/0 AWG
	225			350	2 × 2/0 AWG
	250			400	2 × 3/0 AWG
	300			460	2 × 4/0 AWG
	300			510	2 × 250 kcmil
	350			570	2 × 300 kcmil
	350			620	2 × 350 kcmil
	400			670	2 × 400 kcmil
	450			760	2 × 500 kcmil
	600			840	2 × 600 kcmil
	600			920	2 × 700 kcmil
	600			950	2 × 750 kcmil
	600			980	2 × 800 kcmil
	800			1040	2 × 900 kcmil
	800			1090	2 × 1000 kcmil
		200		450	3 × 1/0 AWG
		225		525	3 × 2/0 AWG
		250		600	3 × 3/0 AWG
		300		690	3 × 4/0 AWG
		300		765	3 × 250 kcmil
		350		855	3 × 300 kcmil
		350		930	3 × 350 kcmil
		400		1005	3 × 400 kcmil
		450		1140	3 × 500 kcmil
			200	600	4 × 1/0 AWG

Country of use: USA/Canada					
Fuse I_N				Current carrying capacity I_Z [A]	Cross section A Installation type E
1 ×	2 ×	3 ×	4 ×		
			225	700	4 × 2/0 AWG
			250	800	4 × 3/0 AWG
			300	920	4 × 4/0 AWG
			300	1020	4 × 250 kcmil
			350	1140	4 × 300 kcmil
			350	1240	4 × 350 kcmil
			400	1340	4 × 400 kcmil
			450	1520	4 × 500 kcmil

Tab. 11-4: Line cross sections and fuses according to UL508A:2007, Table 28.1

Dimensioning variables of the table values

1. Ambient temperature T_A of routed lines ≤ 40 °C
2. Temperature T_L at conductor at nominal current: 90 °C for UL-listed lines (USA/Canada) or 70 °C for PVC lines
3. The nominal current of the fuse is approx. 10-20% above the nominal current I_{LN} of the converter/supply unit or the determined current of the drive system.
4. Installation types:
   - B1 in accordance with IEC 60364-5-52, e.g. stranded wires routed in cable duct
   - B2 in accordance with IEC 60364-5-52, e.g. multi-core line routed in cable duct
   - E in accordance with EN 60204-1, e.g. multi-core line routed on open cable tray
   - In accordance with NFPA 79 (external wiring), UL508A (internal wiring), NEC, NFPA 70:
     - 1 cable with 3 conductors, 1 neutral conductor and 1 equipment grounding conductor
     - Routed in pipe on the wall

     Internal wiring: Routing inside of control cabinet or inside of devices

     External wiring: Routing outside of control cabinet

     Field wiring: Data of cross sections of terminal connectors wired by the user (in the field)
5. Recommendation for design of the fuses:
   - International except for USA/Canada:
     - Fuse-link in accordance with IEC 60269-1, characteristic gG (fuses)
     - Circuit breakers in accordance with IEC 60898-1/2, type B or C
     - Circuit breakers in accordance with IEC 60947-2/6-2

- USA/Canada:
  - Class J; 600 V

☞ **Correction factors**

For deviating dimensioning variables, the corresponding standards specify correction factors.

Below you can find the correction factors for ambient temperature and numbers of routed lines and circuits. If necessary, multiply the determined current in the supply feeder with these factors.

Ambient temperature correction factor

Ambient temperature T_A / °C	30	35	40	45	50	55	60
Correction factor according to EN 60204-1:2006, table D.1	0.87	0.93	1.00	1.1	1.22	1.41	1.73
Correction factor according to NFPA 79:2007, table 12.5.5(a)	0.88	0.94	1.00	1.1	1.18	1.32	1.52

Tab. 11-5: Ambient temperature correction factor in accordance with EN 60204-1:2006 and NFPA 79:2007

Correction factor for bundling lines (installation methods B2 and E) and circuits (installation method B1[1)])

Number of lines	1	2	3	4	5
Correction factor according to EN 60204-1:2006, table D.2	1	1.25	1.43	1.54	1.67
Correction factor according to NFPA 79:2007, table 12.5.5(b)	1	1.25			

1) Three single cores (L1, L2, L3) for mains supply of a device are to be considered as one circuit.

Tab. 11-6: Correction factor for bundling lines and circuits in accordance with EN 60204-1:2006 and NFPA 79:2007

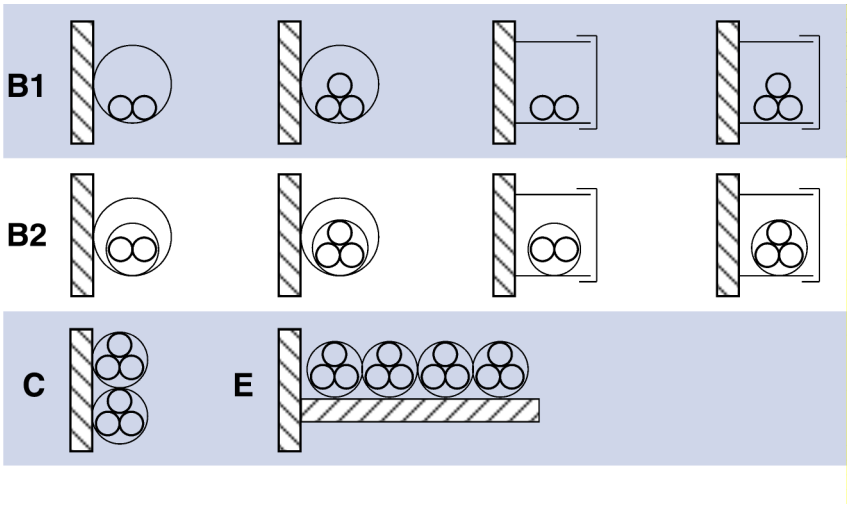

B1	Conductor in installation pipes and in installation channels to be opened
B2	Cables or lines in installation pipes and in installation channels to be opened
C	Cables or lines on walls
E	Cables or lines on open cable trays.

Fig. 11-1: Installation methods (compare IEC 60364-5-52; VDE0298-7; EN 60204-1)

11.2 Determining the Leakage Capacitance

The capacitances which generate so-called leakage currents against ground at the outputs of inverters are regarded as leakage capacitance C_{ab}. The decisive values for the total value C_{ab_g} of the leakage capacitance are:

- Capacitances of output filters
- Capacitances of power cables (capacitance per unit length against shield and ground wire)
- Capacitances of motors (winding capacitance against housing)

The leakage capacitance consists of the values of power cable and motor of all individual drives operated at the mains filter.

Calculation:

$$C_{ab\_g} = C_{ab\_Mg} + C_{ab\_Kg}$$

C_{ab_g}	Total value of leakage capacitance
C_{ab_Mg}	Total value of leakage capacitance of motor
C_{ab_Kg}	Total value of leakage capacitance of cable

Fig. 11-2: Total Leakage Capacitance

The total capacitance $C_{\_ab\_Mg}$ results from the sum of capacitances of the individual motors. For these individual capacitances, see documentation of the motor. For a list of selected values, see Appendix of this documentation under chapter 11.3 "Leakage Capacitances" on page 326.

$$C_{ab\_Mg} = C_{ab(Motor\_1)} + C_{ab(Motor\_2)} \cdots + C_{ab(Motor\_n)}$$

$C_{ab(motor)}$	Leakage capacitance of a motor

Fig. 11-3: Total Leakage Capacitance of Motor

Appendix

$$C_{ab\_Kg} = C_{Y\_K\,typ\,(K1)} \times l_{(K1)} + C_{Y\_K\,typ\,(K2)} \times l_{(K2)} \ldots + C_{Y\_K\,typ\,(Kn)} \times l_{(Kn)}$$

$C_{Y\_K\,typ}$ Capacitance per unit length of cables
C_{ab_Kg} Total leakage capacitance of cables

Fig. 11-4: Total leakage capacitance of cables

The total capacitance $C_{\_ab\_Kg}$ consists of the sum of capacitances of the individual power cables. For the individual capacitances per unit length, see the technical data of the power cables. For a list of selected values, see Appendix of this documentation under chapter 11.3 "Leakage Capacitances" on page 326.

11.3 Leakage Capacitances

11.3.1 Leakage Capacitance of Motors

The data of the typical leakage capacitance refer to the total capacitance of the power connections U, V, W against the motor housing. The tables below contain excerpts from the technical data of motors:

Leakage capacitance

Type	Leakage capacitance of the component
	C_{ab} nF
MSM019A-0300-NN-__-___	0,3
MSM019B-0300-NN-__-___	0,7
MSM031B-0300-NN-__-___	0,7
MSM031C-0300-NN-__-___	1,4
MSM041B-0300-NN-__-___	1,3
	Last modification: 2008-11-20

Tab. 11-7: MSM019A-0300-NN, MSM019B-0300-NN

Type	Leakage capacitance of the component
	C_{ab} nF
MSK030B-0900-NN-__-___-____	0,7
MSK030C-0900-NN-__-___-____	1,3
MSK040B-0450-NN-__-___-____	1,3
MSK040C-0450-NN-__-___-____	2,0
MSK043C-0600-NN-__-___-____	2,1
	Last modification: 2012-09-17

Appendix

Type	Leakage capacitance of the component
	C_{ab} nF
MSK050B-0300-NN-__-___-____	2,1
MSK050C-0300-NN-__-___-____	2,6
MSK060B-0300-NN-__-___-____	2,1
MSK060C-0300-NN-__-___-____	2,1
MSK061B-0300-NN-__-___-____	1,8
MSK061C-0300-NN-__-___-____	2,4
MSK070C-0150-NN-__-___-____	3,8
MSK070D-0150-NN-__-___-____	5,0
MSK070E-0150-NN-__-___-____	6,3
MSK071C-0200-FN-__-___-____	4,6
MSK071D-0200-FN-__-___-____	6,9
MSK071E-0200-FN-__-___-____	8,9
MSK075C-0200-NN-__-___-____	3,8
MSK075D-0200-NN-__-___-____	4,6
MSK075E-0200-NN-__-___-____	5,8
MSK076C-0300-NN-__-___-____	6,5
MSK100A-0200-NN-__-___-____	4,8
MSK100B-0200-NN-__-___-____	10,3
MSK100C-0200-NN-__-___-____	12,8
MSK100D-0200-NN-__-___-____	17,6
	Last modification: 2012-09-17

Appendix

Type	Leakage capacitance of the component
	C_{ab} nF
MSK101C-0200-FN-__-___-____	6,2
MSK101D-0200-FN-__-___-____	13,2
MSK101E-0200-FN-__-___-____	15,2
MSK103A-0300-NN-__-___-____	1,5
MSK103B-0300-NN-__-___-____	2,1
MSK103D-0300-NN-__-___-____	6,0
MSK131B-0200-NN-__-___-____	14,3
MSK131D-0200-NN-__-___-____	27,7
	Last modification: 2012-09-17

Tab. 11-8: MSK - Leakage Capacitance (Excerpt)

See also Rexroth IndraDyn - Technical Data.

11.3.2 Leakage Capacitance of Power Cables

The power cables (bulk cables) of the "RKL" line by Rexroth have the capacitances per unit length listed below. The values refer to the sum of the single capacitances of power cores 1, 2 and 3 against the overall shield.

See also Rexroth Connection Cables - Data Sheet Bulk Cables.

Data Sheet Excerpt- Bulk Cables

Type	Cross section of power core	Leakage capacitance
	mm^2	$C_{Y\_K\_typ}$ nF/m
INK0653	1,0	0,6
INK0650	1,5	0,8
INK0602	2,5	0,7
INK0603	4,0	0,8
INK0604	6,0	0,8
INK0605	10,0	1,0
INK0606	16,0	1,2
INK0607	25,0	1,1
		Last modification: 2007-11-08

Type	Cross section of power core	Leakage capacitance
	mm²	$C_{Y\_K\_typ}$ nF/m
INK0667	35,0	1,2
INK0668	50,0	1,3
		Last modification: 2007-11-08

Tab. 11-9: INK - Technical Data (Excerpt)

Data Sheet Excerpt- Bulk Cables

Type	Cross section of power core	Leakage capacitance $C_{Y\_K\_typ}$
	mm²	nF/m
REH0800	2,5	0,2

Tab. 11-10: REH - Technical Data (Excerpt)

Approximate calculation is allowed with the following values:

- Cross section 1 … 6 mm²: 1 nF/m
- Cross section 10 … 50 mm²: 1.2 nF/m

Index

Index

Index

I

L

Index

Index

Notes

Notes

The Drive & Control Company

Rexroth
Bosch Group

Bosch Rexroth AG
Electric Drives and Controls
P.O. Box 13 57
97803 Lohr, Germany
Bgm.-Dr.-Nebel-Str. 2
97816 Lohr, Germany
Phone +49 9352 18 0
Fax +49 9352 18 8400
www.boschrexroth.com/electrics

R911322210

DOK-INDRV*-HCS01******-PR05-EN-P