engineering
mannesmann
Rexroth

MTC200 / MT-CNC
Machine Operator Panel
BTM16

Functional Description

DOK-MTC200-BTM16.1***-FKB1-EN-P

280651

Indramat

Title Machine Operator Panel BTM16

Type of document Functional Description

Documentation type DOK-MTC200-BTM16.1****-FKB1-EN-P

Internal filing Drawing no.: 109-1041-4121 DE/05.98

Purpose of the document

- Description of BTM16 hardware functions
- BTM16 technical data
- BTM16 connection and installation
- BTM16 programming

Configuration control

Documentation identification of previous releases	Release date	Comment
DOK-MTC200-BTM16.1****-FKB1-EN-P	05.98	New issue

Published by INDRAMAT GmbH • Bgm.-Dr.-Nebel-Str. 2 • D-97816 Lohr a. Main

Phone +49 (0)9352/40-0 • Tx 689421 • Fax +49 (0)9352/40-4885

Abt. ESM (OI)

Note This documentation is printed on chlorine free bleached paper.

Contents

1 Product Presentation

1.1 Brief Description

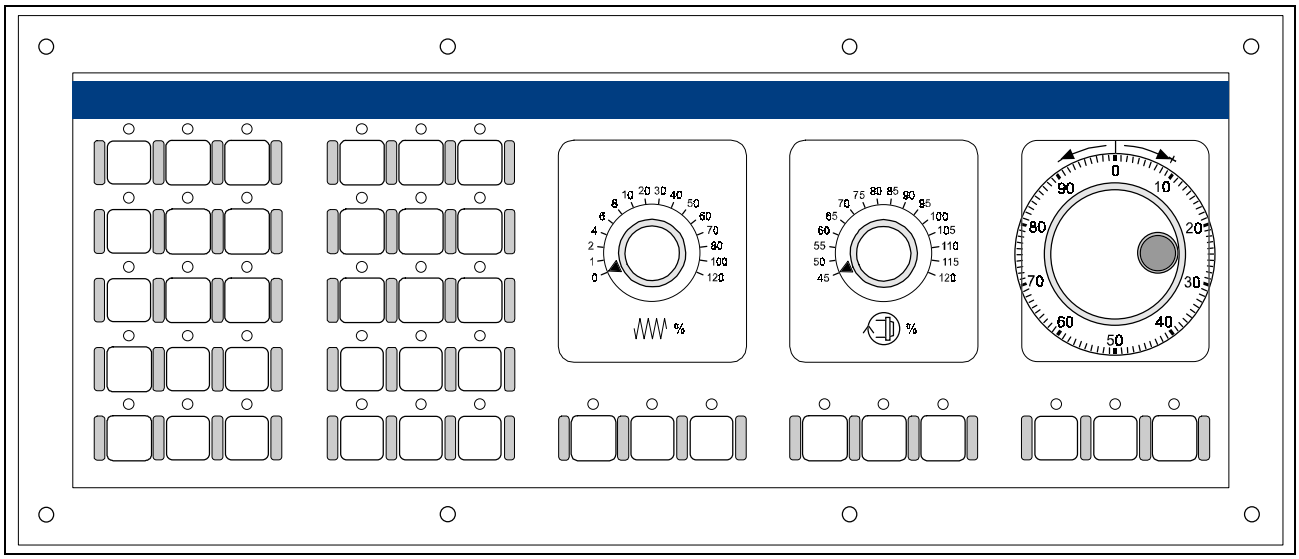

Fig. 1-1: BTM16 front view

Machine operator panels complete machine operator terminals and support both mode selection as well as manual machine operation. Hence they incorporate the required elements for such operations as keys with LEDs, feedrate and spindle overrides, emergency stop pushbutton and handwheel.

From the optical and dimensional point of view, the BTM16 represents a machine operator panel designed for use in conjunction with the machine operator terminal BTV30.

The control panel incorporates two freely programmable keypad modules, a feedrate override module, a spindle override module as well as one module slot which can be equipped as needed. The right module slot can either be provided with a blind plate, an emergency stop pushbutton or a handwheel.

In total, 39 keys which can be labeled and freely programmed and 39 related LEDs are available.

Since the handwheel electronics are always available within the basic unit, an external handwheel can be connected instead of a mounted handwheel. This is still possible if the right module slot is equipped with an emergency stop pushbutton.

In addition, the BTM16 has 16 inputs and 16 outputs to connect further, externally mounted control and display elements.

The BTM16 is connected to an MT-CNC's or MTC200's SPS via InterBus-S remote bus interface.

The BTM16 represents a reasonable alternative to the freely configurable machine operator panel BTM15.

1.2 Exceptional Features of the BTM16

Keys and LEDs

The BTM16 features 39 real keys with key lids of transparent plastic and a clear keystroke. Hence machine operation is quick and does not tire the user. Nevertheless its front complies to IP65 and is resistant to all known coolants and lubricants.

Raised, intermediate fillets prevent either slipping or inadvertant operation of adjoining keys.

Bright, yellow LEDs are located above each key. Hence the signal status is still visible during key operation.

Key inlays supplied or selfdesigned ones, can be inlayed into the key lids which are removable without a tool and accessible from the front.

Keys and LEDs can be assigned randomly and programmed within the SPS. In this way, jog keys, on/off switching and toggling functions can be generated in any combination.

Override Module

A feedrate override and a spindle override module enable convenient influencing and machining process optimization. Sixteen grids for individual feedrate and spindle speed setting are available spread over an angle of rotation of 240 degrees. The feedrate override module is available in two different graduations of scale, either a fine gradation in the lower area or around 100%.

The three keys located underneath the rotary switch can be used for override selection as well as the selection of the fixed values 0% and 100%.

SPS function blocks are available within the SPS programming system for convenient implementation of an override module.

Variable Module Slot

The BTM16's right hand area is always equipped with 3 freely programmable keys with LEDs. As an option, the BTM 16 is available with

- an emegency stop pushbutton or
- a handwheel

instead of the blind plate provided with the basic model.

External Handwheel

Since the handwheel electronics are always available, an external handwheel can be connected instead of the integrated one. In addition to the handwheel connection option, 6 additional inputs are provided for axis selection or valuation of handwheel pulses.

Remote Bus Connection

In a simple and cost effective way, the BTM16 is connected to the I/O-level of the SPS via InterBus. In this way, costly and individual wiring of the various control components is omitted.

Additional I/Os

The BTM16 has 16 inputs and 16 outputs to connect keys, key switches and signal lamps mounted apart from the BTM16. As a result, these additional control components need not be wired directly to the SPS.

Mounting variations

Like the BTV30 and the BTM15, the BTM16 is designed for panel and substructure installation. By using the substructure installation it is possible to design a pleasant front panel without spoiling screw heads. For exact dimensions of the mounting cutouts and location of boreholes and threaded pins see page 4-2.

2 Description

2.1 Basic Unit

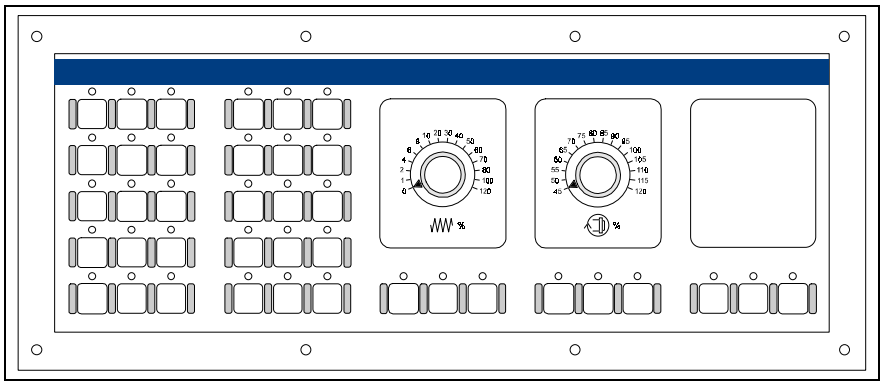

Fig. 2-2: BTM16 Basic unit

The BTM16 is divided into five equal operation areas. The four areas to the right are always equipped with two keypad modules, one feedrate override module and one spindle override module. The right area can be equipped as needed.

Keypad Module

Each of the two keypad modules consists of 15 pushbuttons arranged in a matrix of 3 columns and 5 rows. A bright and yellow LED is located above each pushbutton which can be programmed via the SPS as needed.

The transparent key lids can be removed without using a tool and are accessible from the front. For key labeling, inlays containing labels or symbols are inserted into the key lids. For this, a sheet of paper containing preprinted, easy-to-remove key inlays is provided.

It is also possible to design one's own symbols and print them on a laser printer. The size of the inlay must be 12 * 12mm with a thickness of 0,2mm. The prefered material is a polyester foil.

After inserting the key inlay the key lid is pressed back on the key body.

Feedrate Override Module

The third module slot is equipped with a feedrate override module. A gray-code-switch with 16 steps across an angle of rotation of 240 degree allows feedrate adjustment during machining.

Depending on the technology, two different graduations of scale in the range between 0 and 120% are available:

VA: 0-1-2-4-6-8-10-20-30-40-50-60-70-80-100-120%

VB: 0-10-20-40-60-70-75-80-85-90-95-100-105-110-115-120%

Type VA permits fine tuning at the beginning of the setting range. In contrast, type VB provides a higher resolution around 100%.

Three pushbuttons with LEDs are located underneath the rotary switch. They can be used to activate the feedrate override and to select the fixed values 0% and 100%. However, the functionality of the pushbuttons must be programmed within the SPS program and can be freely determined by the machine tool builder in this way.

Function block OVGY0_xx is provided within the SPS programming system for the conversion of the gray code (rotary switch position) into binary representation which than can be handed over to the CNC (see documentation 'SPS Function Blocks' Mappe 3)

Spindle Override Module

The fourth module slot is equipped with a spindle override module. For spindle speed adjustment a gray-code-switch with 16 steps across an angle of rotation of 240 degree is also provided. Within a range of 45 to 120% spindle speed can be set the following gradation:

SA: 45-50-55-60-65-70-75-80-85-90-95-100-105-110-115-120%

The three pushbuttons with LEDs located underneath the rotary switch can be used to activate the spindle override and to select the fixed values 0% and 100% directly.

Function block OVGY0_xx is provided within the SPS programming system for conversion of the gray code (rotary switch position) into binary representation which than can be handed over to the CNC (see documentation 'SPS Function Blocks' Mappe 3)

Variably Equippable Module Slot

The fifth, right module slot of the basic unit is only equipped with 3 pushbuttons and the affiliated LEDs.

As an option, this module slot can be provided with either

- an emergency stop pushbutton or
- a handwheel.

2.2 Emergency Stop Pushbutton

The right module slot is equipped with an emergency stop pushbutton as an option. The red pushbutton (40 mm Ø) is only integrated mechanically into the BTM16. The two NO-contacts of the circuit elements can be wired within the machines E-Stop-chain in any way. One of the BTM16's additional inputs must be used, if the emergency state should be reported to the SPS.

Further circuit elements can be added by the machine tool builder if required.

The three pushbuttons located underneath the E-Stop pushbutton can be used for any purpose such as functions 'Power ON' and 'Power OFF'.

2.3 Handwheel

The right module slot is optionally equipped with a handwheel for axes fine positioning. A high-quality electronical handwheel with 100 grids per revolution is employed. Within the SPS, function HNDWHEEL is provided for handwheel pulses evaluation and further processing within the CNC. A detailed description of this function is given within 'SPS Interface Description', section 'Standard Functions', chapter 'Handwheel'.

The three pushbuttons located underneath the handwheel can be used for any purpose such as axis selection or handwheel valuation.

2.4 Additional Inputs/Outputs

The BTM16 provides 16 additional inputs and 16 outputs for the connection of additional control components as pushbuttons, rotary switches, toggle switches, key switches and so on as well as signal lamps.

The inputs and outputs are divided into groups of 8 inputs und 8 outputs each. Each group must be supplied seperatly. In this way group

disconnection is made possible. All additional inputs and outputs are physically seperated from the rest of the BTM's electronics.

The signal status of the individual inputs is indicated by red LEDs located next to the plug junction. Outputs are indicated by green LEDs. The LED display is active only if the input's or output's external power is applied.

3 Technical Data

3.1 General Data

Weight	approx. 1050g with E-Stop PB, approx. 1300g with handwheel
Type of protection	Front plate IP65, housing IP20 DIN40 050, IEC 529
Maximum ambient temperature operating storage, shipping	 +5°C to +45°C -20°C to +60°C
Operating air pressure	860 to 1060 hPa, 1500 m
Maximum power dissipation	approx. 20 W
Material front plate key lids scale plates	 Polyamide (PA6) Polycarbonat Polyester foil
Color	RAL 7037 dust gray

Fig. 3-3: General technical data

3.2 Keypad Modules

Number of PBs per module	15
Length of keystroke	1,8 mm
Operating force	4,5 N
Life span	$>10^6$ operations

Fig. 3-4: Pushbutton data

3.3 Gray-Code Module

No. of indexing positions	16
Angle of rotation	240º
Operating torque	approx. 5 Ncm
Life span	> 50000 cycles

Fig. 3-5: Gray-code-switch data

3.4 Emergency Stop Pushbutton

Type	Twist unlock PB, 40mm Ø, red
Front element	Telemechanique ZA2-BS54
Lower switching part	Telemechanique ZA2-BZ102 (1 NC)
Auxiliary circuit block	Telemechanique ZB2-BE102 (1 NC)
Bias-reducing potential U_{max}	220V DC/AC
Current on contact I_{max}	2A DC/AC
Standards	IEC337-1,-2, DIN VDE 0660, UL 508, CSA C22-2

Fig. 3-6: Emergency stop PB data

3.5 Handwheel Module

Pulses per revolution	100
Maximum speed	300 min^{-1}
Stop torque	approx. 15 Ncm
Life span of light source of mechanics	 > 10^5 operating hours > 10^7 movements

Fig. 3-7: Handwheel data

3.6 External Handwheel

Supply voltage	5VDC
maximum current consumption	200mA
Maximum cable length	approx. 50m (depending on handwheel)
Cable type	twisted pair, separately shielded

Fig. 3-8: External handwheel data

3.7 Additional Inputs

Ext. supply voltage	24VDC ±20%
Low level	0 - 10 V
High level	18 - 30 V
$I_{E\ High}$	< 10 mA

Fig. 3-9: Input data

3.8 Additional Outputs

Ext. supply voltage	24VDC ±20%
Imax per output	200mA
Combined current Σ_{Q0-Q7}	800mA
Combined current Σ_{Q8-Q15}	800mA

Fig. 3-10: Output data

4 Dimensions

4.1 Housing Dimensions

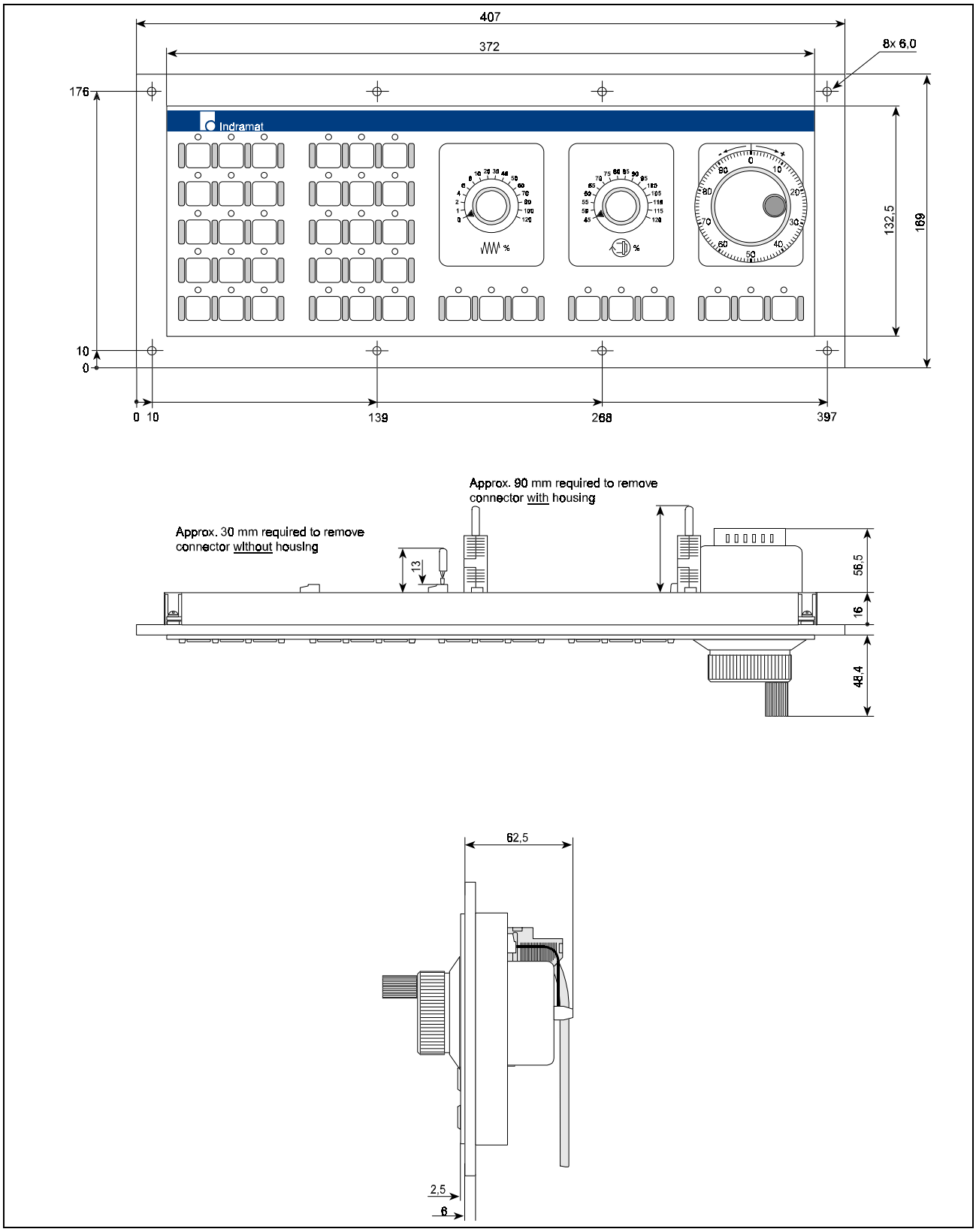

Fig. 4-11: Housing dimension

4.2 Mounting Cutout when Mounting from the Back

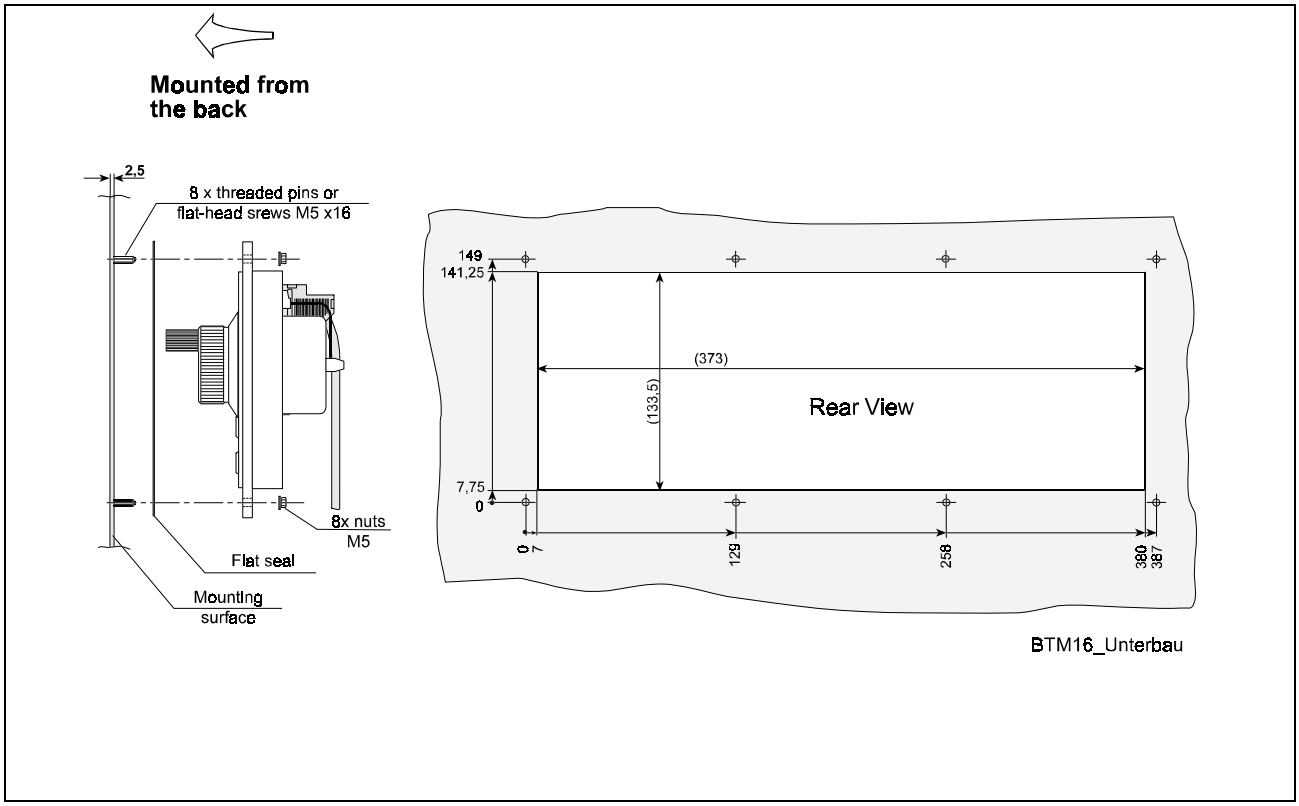

Fig. 4-12: Dimensions when mounting from the back

4.3 Mounting Cutout when Mounting from the Front

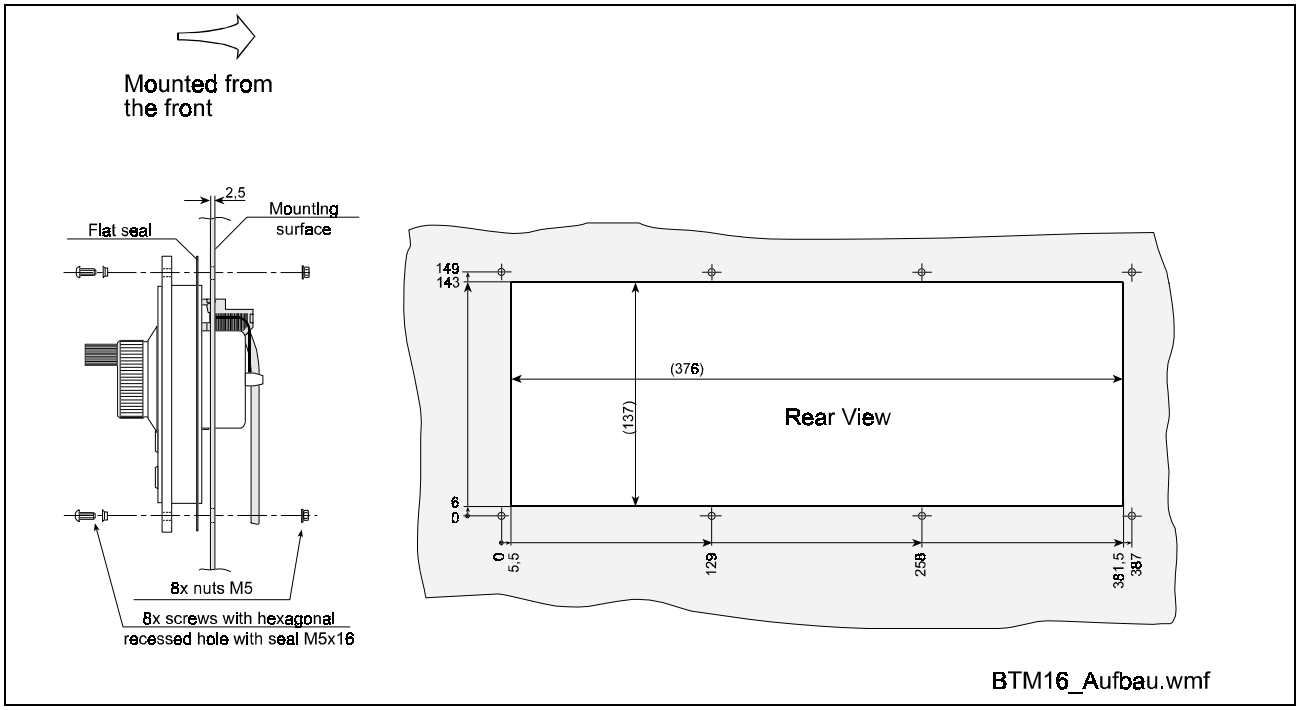

Fig. 4-13: Dimensions when mounting from the front

5 Connections

5.1 Location of connectors

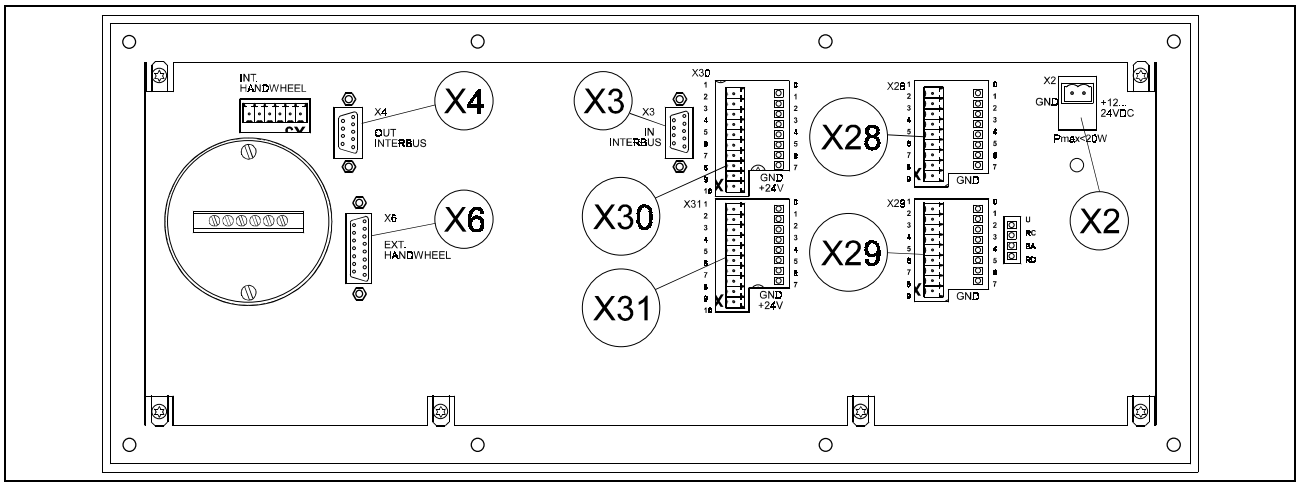

Fig. 5-14: BTM16 rear view

5.2 Power Supply X2

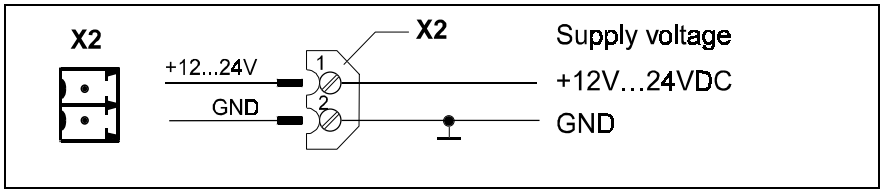

Fig. 5-15: X2: Connection

Pin	Connection
1	+12VDC to +24VDC
2	GND

Fig. 5-16: X2: Pin arrangement

5.3 InterBus-S Interface IN X3

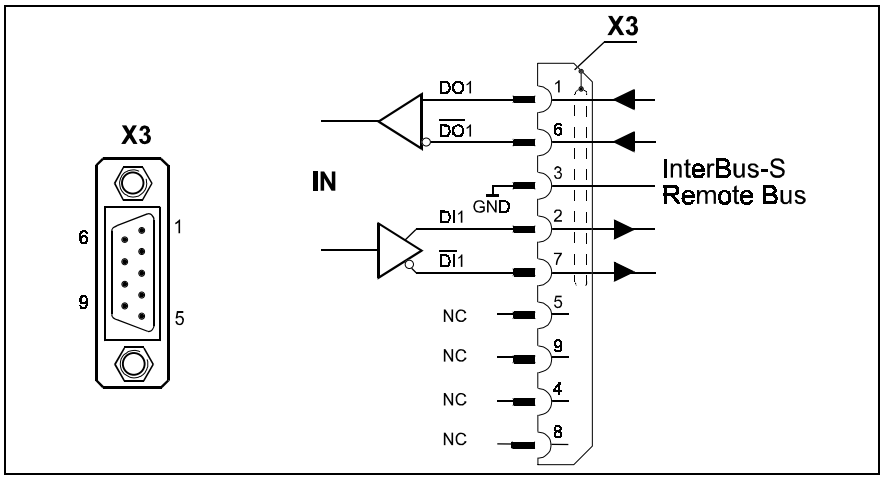

Fig. 5-17: X3: Connection

Pin	Signal	Pin	Signal
1	DO1 Data Out 1	2	DI1 Data In 1
3	GND	4	N. C.
5	N. C.	6	/DO1 Data Out 1
7	/DI1 Data In 1	8	N. C.
9	N. C.		

Fig. 5-18: X3: Pin arrangement

5.4 InterBus-S Interface OUT X4

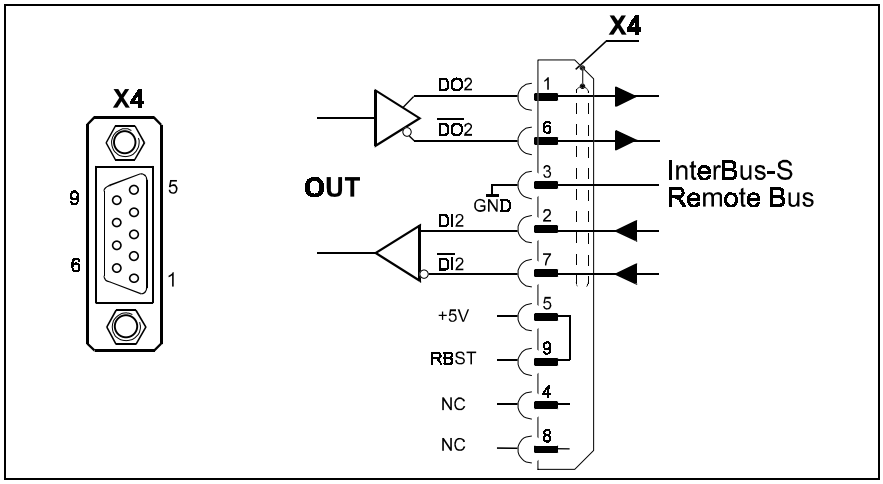

Fig. 5-19: X4: Connection

Pin	Signal	Pin	Signal
1	DO2 Data Out 2	2	DI2 Data In 2
3	GND	4	N. C.
5	+ 5 V Out	6	/DO2 Data Out 2
7	/DI2 Data In 2	8	N. C.
9	RBST		

Fig. 5-20: X4: Pin arrangement

5.5 External Handwheel

The external handwheel must provide counting pulses via two channels with 90º phase displacement to each other. The two channels must work in phase opposition:

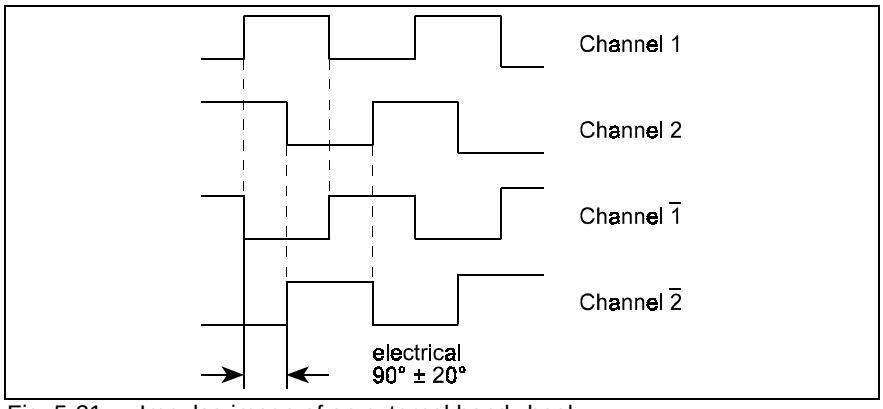

Fig. 5-21: Impulse image of an external handwheel

An external handwheel can only be connected, if there is no internal handwheel.

For example, type IHF (JAKOB) can be used as an external handwheel.

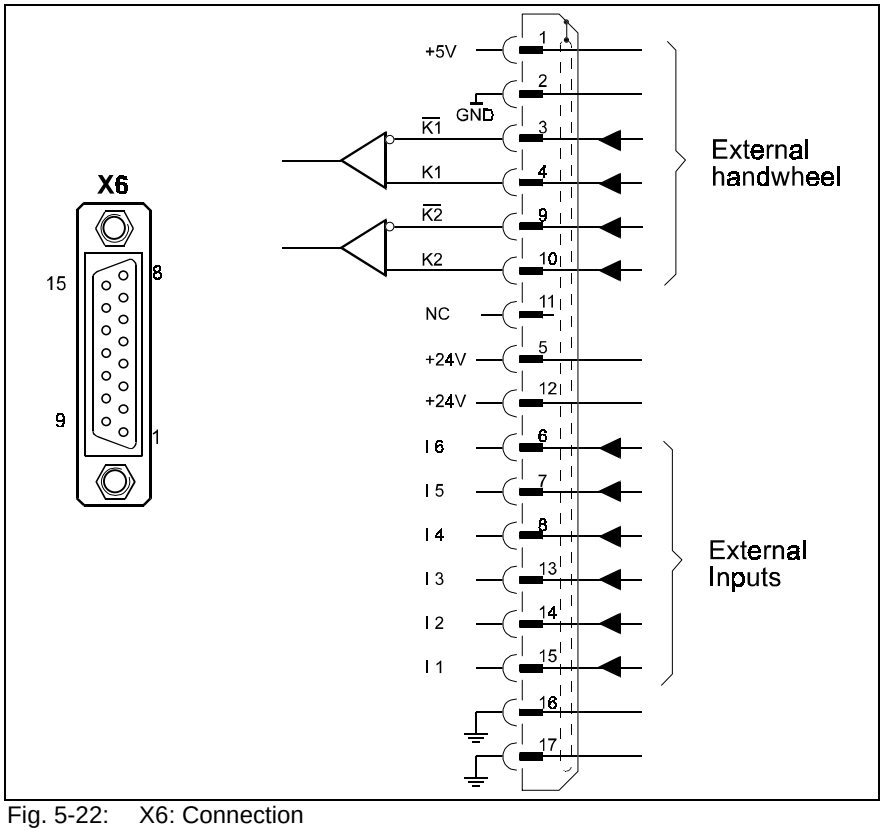

Fig. 5-22: X6: Connection

Pin	Signal	Pin	Signal
1	+ 5 V Out	2	GND
3	/K1	4	K1
5	+24 V Out	6	I 6
7	I 5	8	I 4
9	/K2	10	K2
11	N.C.	12	+ 24 V Out
13	I 3	14	I 2
15	I 1		

Fig. 5-23: X6: Pin arrangement

5.6 Additional Inputs X28 and X29

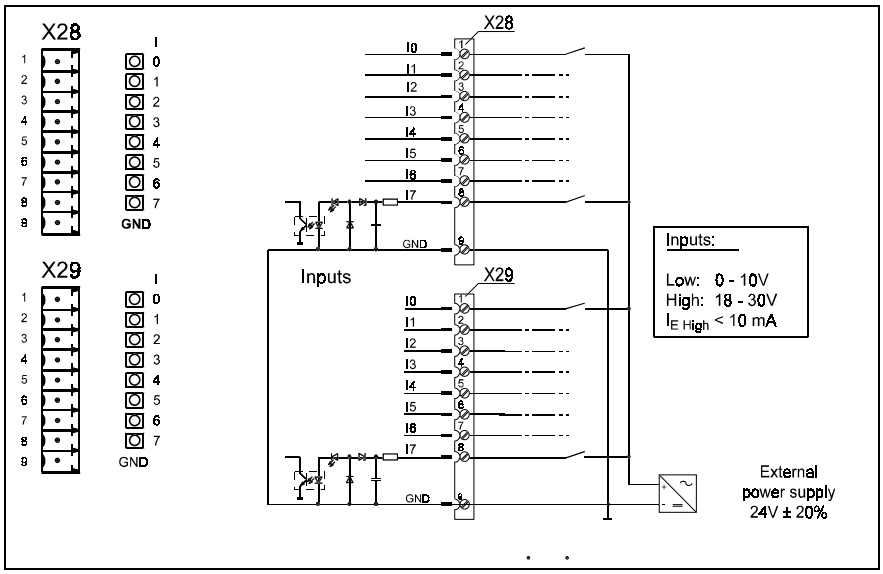

Fig. 5-24: X28 - X29: Connection

Pin	Signal	Pin	Signal
X28-1	Input 0	X28-2	Input 1
X28-3	Input 2	X28-4	Input 3
X28-5	Input 4	X28-6	Input 5
X28-7	Input 6	X28-8	Input 7
X28-9	GND		
X29-1	Input 0	X29-2	Input 1
X29-3	Input 2	X29-4	Input 3
X29-5	Input 4	X29-6	Input 5
X29-7	Input 6	X29-8	Input 7
X29-9	GND		

Fig. 5-25: X28 - X29: Pin arrangement

5.7 Additional Outputs X30 and X31

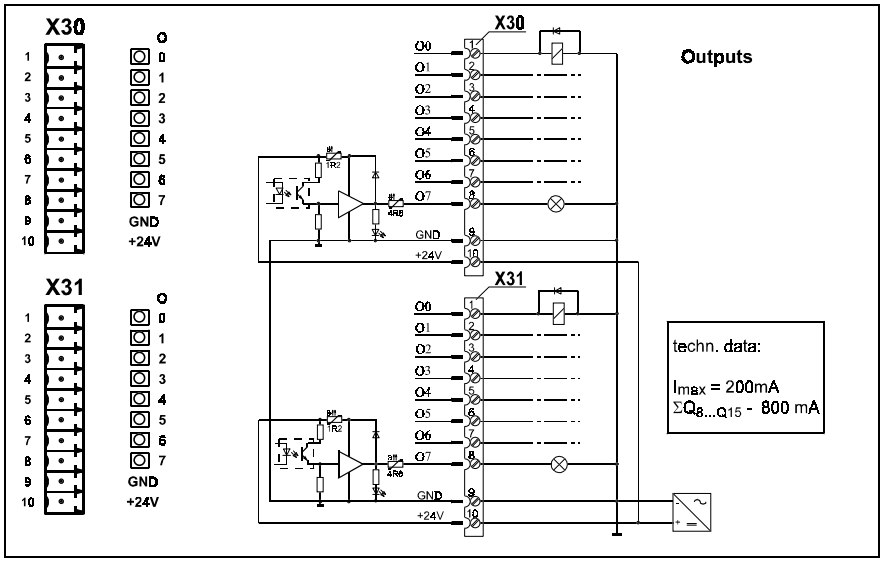

Fig. 5-26: X30 - X31: Connection

Pin	Signal	Pin	Signal
X30-1	Output 0	X30-2	Output 1
X30-3	Output 2	X30-4	Output 3
X30-5	Output 4	X30-6	Output 5
X30-7	Output 6	X30-8	Output 7
X30-9	GND	X30-10	+ 24 V
X31-1	Output 0	X31-2	Output 1
X31-3	Output 2	X31-4	Output 3
X31-5	Output 4	X31-6	Output 5
X31-7	Output 6	X31-8	Output 7
X31-9	GND	X31-10	+ 24 V

Fig. 5-27: X30 - X31: Pin arrangement

5.8 Ground (Earthing)

A ground wire of 6mm² minimum must be wired from the grounding bolt to the machine's cental grounding terminal to earth the device as well as the shield of the electronics.

5.9 Wiring

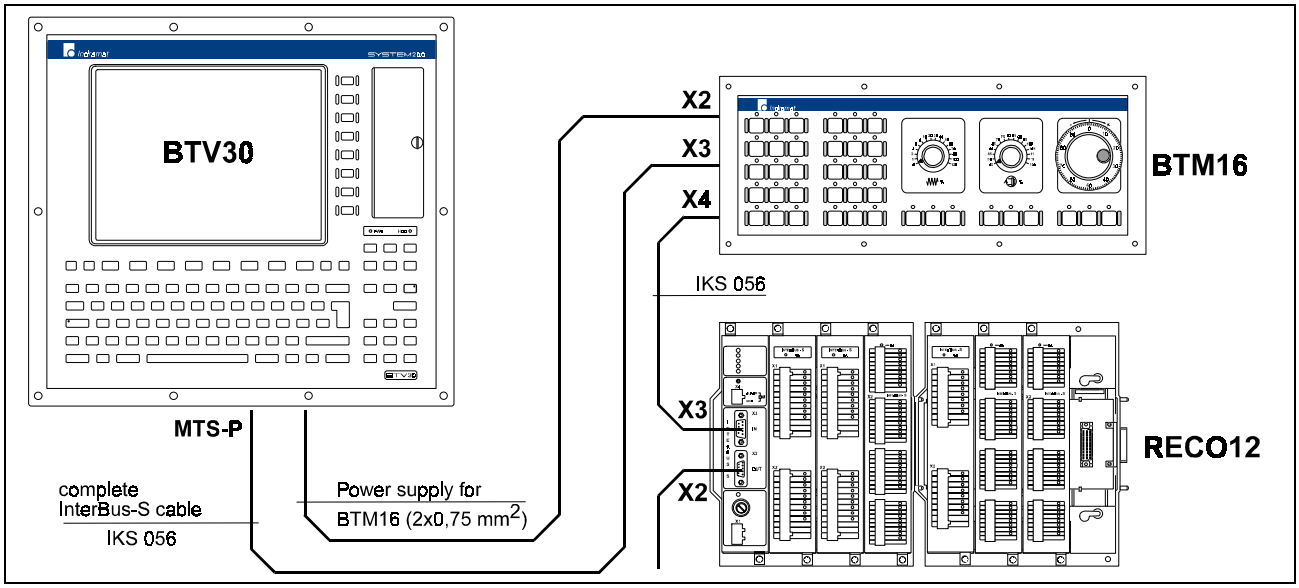

Fig. 5-28: Wiring diagram of BTM16 with BTV30 and RECO12

6 Addressing and Programming

6.1 InterBus Connection

ID Code

The BTM16 represents one participant within the InterBus with a data width of 7 words and identifies itself via ID code 03 (digital device with inputs and outputs).

Device List Entry

Provided that the BTM16 is not yet entered in the device list of the SPS programming system, it can be carried out according to the following steps:

- Boot SPS programming system and call the I/O editor: <Alt>+<I>
- Select IBS-Master (G4)
- Call local menu: <Alt>+<F10>, or <Alt>+<Menu>
- select InterBus-S, edit IBS list
- Insert new participant: <Alt>+<E>

The following entries need to be carried out within the dialogue:

Dialoque Field	Entry
Name	BTM16
Comment	Machine Operator Panel
ID code	LOW: 03 HIGH: 07
Binary outputs / offset	112 / 0
Binary inputs / offset	112 / 14

Fig. 6-29: IBS device list entries

After data entry, the mask must look as follows:

Fig. 6-30: Mask of the IBS selection list

Within the SPS programming system's I/O editor, a logical address between 1 and 999 must be assigned to each BTM16.

This logical address is to be used in the following tables instead of the space holder '*'.

Diagnostics

Four LEDs located at the BTM16's rear are used to diagnose the status of the InterBus link. The LED's significance can be obtained from the following table:

LED	Meaning
U, green	Supply voltage On: U existing Off: U not existing - connector X2 disconnected - no power at X2 - internal power supply broken
RC, green	**R**emote bus **C**heck monitoring of the incoming remote bus cable (X6) On: Incoming remote bus link established Off: Incoming remote bus link disrupted
RD, red	**R**emote bus **D**isable On: Remote bus is disabled Off: Remote bus is not disabled
BA, green	**B**us **Ac**tive On: InterBus data transmission is active Off. No data transmission

Fig. 6-31: InterBus-S status LEDs

All green LEDs are on during a faultless operation.

6.2 Keypad Modules

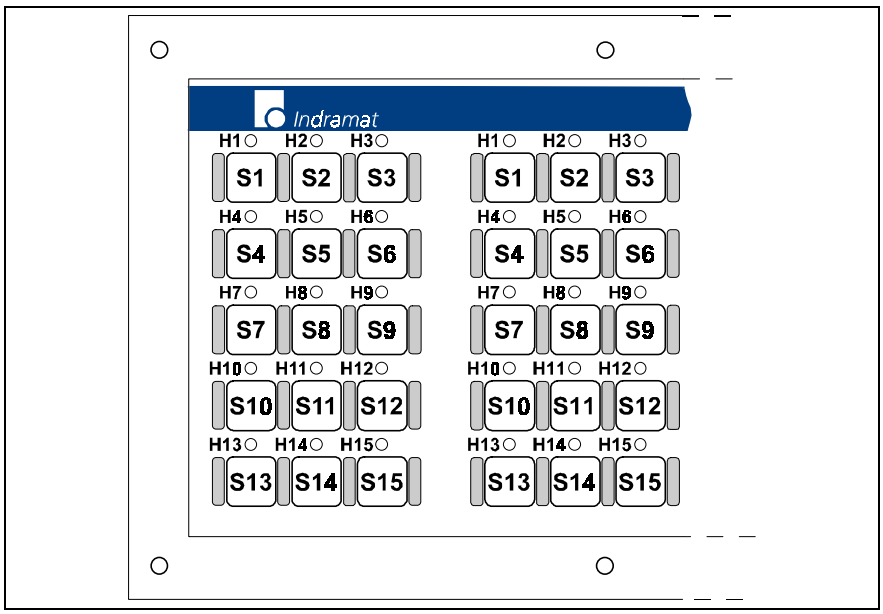

Fig. 6-32: Keypad module

The left module is named keypad module 1, the right one is keypad module 2.

Keypad Module 1

Key	Address	LED	Address
S1	I*.14.0	H1	Q*.0.0
S2	I*.14.1	H2	Q*.0.1
S3	I*.14.2	H3	Q*.0.2
S4	I*.14.3	H4	Q*.0.3
S5	I*.14.4	H5	Q*.0.4
S6	I*.14.5	H6	Q*.0.5
S7	I*.14.6	H7	Q*.0.6
S8	I*.14.7	H8	Q*.0.7
S9	I*.15.0	H9	Q*.1.0
S10	I*.15.1	H10	Q*.1.1
S11	I*.15.2	H11	Q*.1.2
S12	I*.15.3	H12	Q*.1.3
S13	I*.15.4	H13	Q*.1.4
S14	I*.15.5	H14	Q*.1.5
S15	I*.15.6	H15	Q*.1.6

Fig. 6-33: Addresses of keypad module 1

Keypad Module 2

Key	Address	LED	Address
S1	I*.16.0	H1	Q*.2.0
S2	I*.16.1	H2	Q*.2.1
S3	I*.16.2	H3	Q*.2.2
S4	I*.16.3	H4	Q*.2.3
S5	I*.16.4	H5	Q*.2.4
S6	I*.16.5	H6	Q*.2.5
S7	I*.16.6	H7	Q*.2.6
S8	I*.16.7	H8	Q*.2.7
S9	I*.17.0	H9	Q*.3.0
S10	I*.17.1	H10	Q*.3.1
S11	I*.17.2	H11	Q*.3.2
S12	I*.17.3	H12	Q*.3.3
S13	I*.17.4	H13	Q*.3.4
S14	I*.17.5	H14	Q*.3.5
S15	I*.17.6	H15	Q*.3.6

Fig. 6-34: Addresses of keypad module 2

6.3 Feedrate Override Module

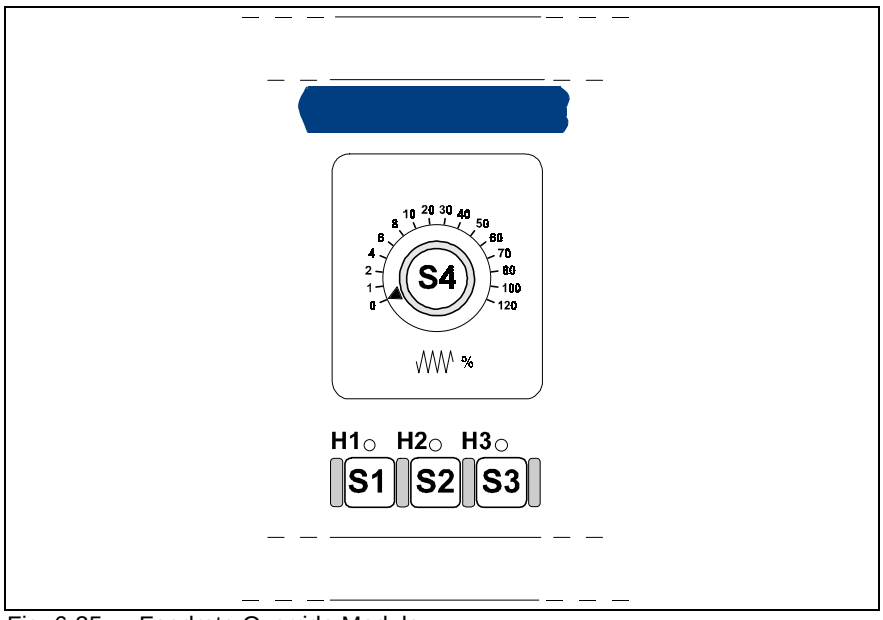

Fig. 6-35: Feedrate Override Module

Key	Address	LED	Address
S1	I*.18.0	H1	Q*.4.0
S2	I*.18.1	H2	Q*.4.1
S3	I*.18.2	H3	Q*.4.2

Fig. 6-36: Addresses of the feedrate override module keys

Switch	Address
S4 Bit A	I*.19.0
S4 Bit B	I*.19.1
S4 Bit C	I*.19.2
S4 Bit D	I*.19.3
S4 Bit E	I*.19.4

Fig. 6-37: Addresses of the feedrate override module rotary switch

6.4 Spindle Override Module

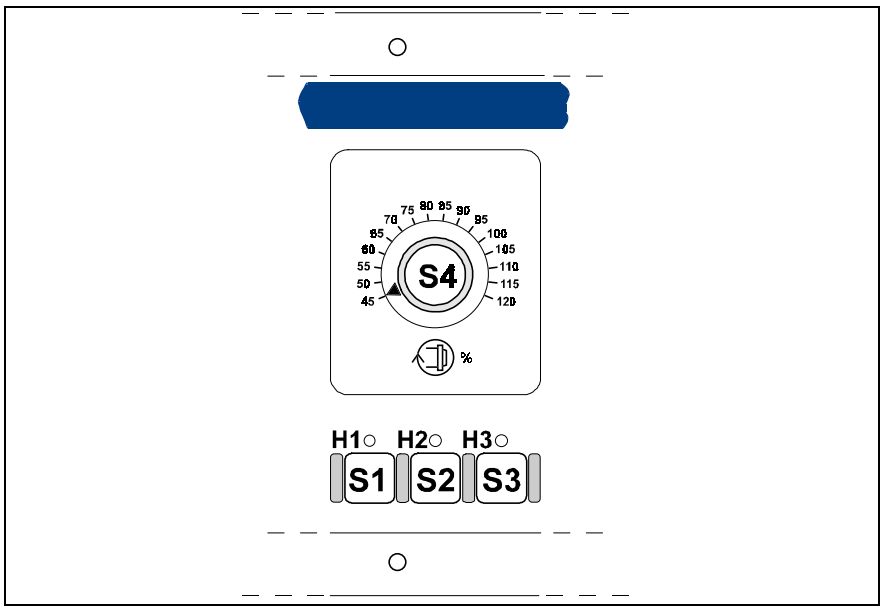

Fig. 6-38: Spindle override module

Key	Address	LED	Address
S1	I*.20.0	H1	Q*.6.0
S2	I*.20.1	H2	Q*.6.1
S3	I*.20.2	H3	Q*.6.2

Fig. 6-39: Addresses of the spindle override module keys

Switch	Address
S4 Bit A	I*.21.0
S4 Bit B	I*.21.1
S4 Bit C	I*.21.2
S4 Bit D	I*.21.3
S4 Bit E	I*.21.4

Fig. 6-40: Addresses of the spindle override module rotary switch

6.5 Gray-Code Table

The Gray-Code switch position is converted into the 4 channels A to D according to the following table. Channel E always remains 0.

%	%	%	Bit				
VA	**VB**	**SA**	**A**	**B**	**C**	**D**	**E**
0	0	45	0	0	0	0	0
1	10	50	1	0	0	0	0
2	20	55	1	1	0	0	0
4	40	60	0	1	0	0	0
6	60	65	0	1	1	0	0
8	70	70	1	1	1	0	0
10	75	75	1	0	1	0	0
20	80	80	0	0	1	0	0
30	85	85	0	0	1	1	0
40	90	90	1	0	1	1	0
50	95	95	1	1	1	1	0
60	100	100	0	1	1	1	0
70	105	105	0	1	0	1	0
80	110	110	1	1	0	1	0
100	115	115	1	0	0	1	0
120	120	120	0	0	0	1	0

Fig. 6-41: Gray-Code table

6.6 Module Slot 5

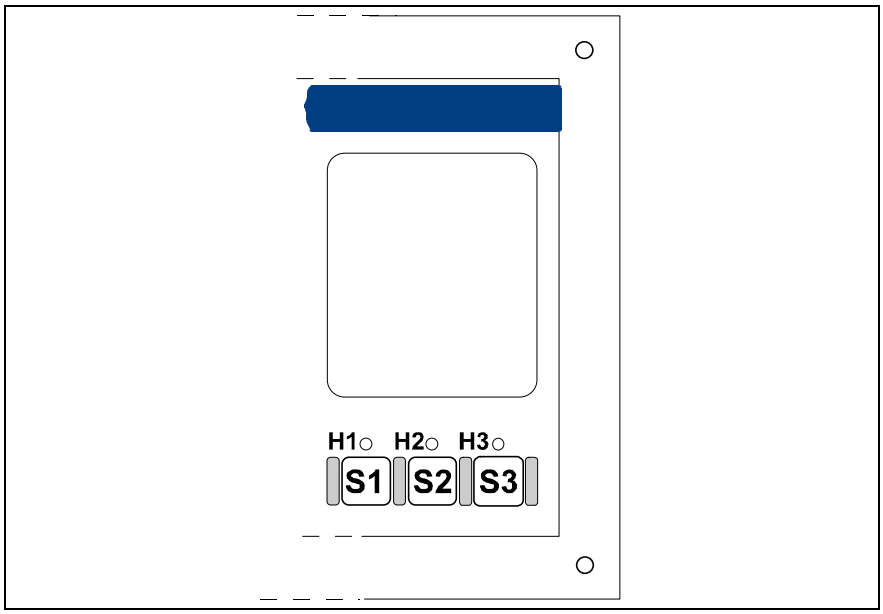

Fig. 6-42: Module slot 5

Module slot 5 is always equipped with 3 keys and 3 LEDs. Regardless of any other equipment like a blind plate, an E-Stop or a handwheel, the keys and LEDs are addressed according to the following table:

Key	Address	LED	Address
S1	I*.24.0	H1	Q*.10.0
S2	I*.24.1	H2	Q*.10.1
S3	I*.24.2	H3	Q*.10.2

Fig. 6-43: Addresses of module slot 5

6.7 Handwheel Module

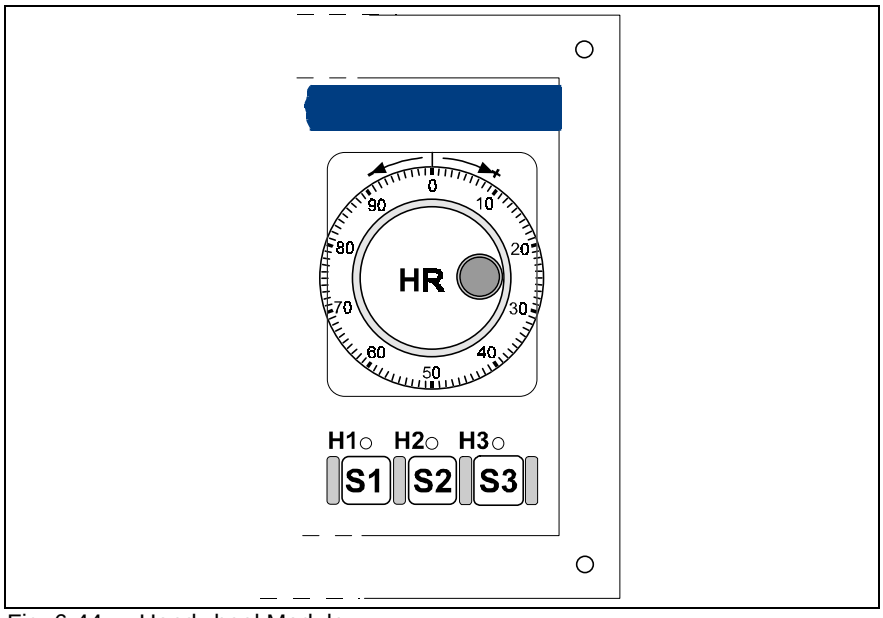

Fig. 6-44: Handwheel Module

The handwheel pulses are counted within a 16 bit register. The register's contents are handed over to the SPS in the form of an integer value. The counter value can also be read in bytes, if standard function HNDWHEEL is not used.

Handwheel	Address
Word	IW*.26
High-Byte	IB*.26
Low-Byte	IB*.27

Fig. 6-45: Addressing of the handwheel

6.8 External Handwheel

An external handwheel uses the same counting register as the handwheel module and thus the same addresses. For this reason, only one handwheel can be operated at the BTM16.

Six additional inputs are provided for an external handwheel:

Input	Address
I1	I*.25.2
I2	I*.25.3
I3	I*.25.4
I4	I*.25.5
I5	I*.25.6
I6	I*.25.7

Fig. 6-46: Additional inputs for an external handwheel

For example, type IHF (JAKOB) can be used as an external handwheel.

6.9 Additional Inputs

Connector X28

Socket	Input	Address
X28 - 1	I0	I*.22.0
X28 - 2	I1	I*.22.1
X28 - 3	I2	I*.22.2
X28 - 4	I3	I*.22.3
X28 - 5	I4	I*.22.4
X28 - 6	I5	I*.22.5
X28 - 7	I6	I*.22.6
X28 - 8	I7	I*.22.7

Fig. 6-47: Addresses of inputs X28

Connector X29

Socket	Input	Address
X29 - 1	I0	I*.23.0
X29 - 2	I1	I*.23.1
X29 - 3	I2	I*.23.2
X29 - 4	I3	I*.23.3
X29 - 5	I4	I*.23.4
X29 - 6	I5	I*.23.5
X29 - 7	I6	I*.23.6
X29 - 8	I7	I*.23.7

Fig. 6-48: Addresses of inputs X29

6.10 Additional Outputs

Connector X30

Socket	Output	Address
X30 - 1	Q0	Q*.8.0
X30 - 2	Q1	Q*.8.1
X30 - 3	Q2	Q*.8.2
X30 - 4	Q3	Q*.8.3
X30 - 5	Q4	Q*.8.4
X30 - 6	Q5	Q*.8.5
X30 - 7	Q6	Q*.8.6
X30 - 8	Q7	Q*.8.7

Fig. 6-49: Addresses of outputs X30

Connector X31

Socket	Output	Address
X31 - 1	Q0	Q*.9.0
X31 - 2	Q1	Q*.9.1
X31 - 3	Q2	Q*.9.2
X31 - 4	Q3	Q*.9.3
X31 - 5	Q4	Q*.9.4
X31 - 6	Q5	Q*.9.5
X31 - 7	Q6	Q*.9.6
X31 - 8	Q7	Q*.9.7

Fig. 6-50: Addresses of outputs X31

7 Type Code

Type Code →	1	2	3	4	5	6	7	8	9	10	11	12	13	14	15	16	17	18	19	20	21	22	23	24	25	26	27	28	29	30	31	32	33	34	35	36	37	38	39	40
Example:	B	T	M	1	6	.	1	-	T	A	-	T	A	-	V	A	-	S	A	-	B	A	-	2	E	A														

1. Product Name
1.1 BTM . . . . . = BTM

2. Model Number
2.1 16 . . . . . .= 16

3. Hardware Revision
3.1 1 . . . . . = 1

4. Configuration ①
4.1 TA-TA-VA-SA-BA
4.2 TA-TA-VA-SA-HA
4.3 TA-TA-VA-SA-NA
4.4 TA-TA-VB-SA-BA
4.5 TA-TA-VB-SA-HA
4.6 TA-TA-VB-SA-NA

5. Master Board
5.1 16 Inputs and 16 Outputs. . . . . = 2EA

Notes:
Module Slot 1 to 5
① BA = Blind Plate
HA = Handwheel Module
NA = E-Stop Module
SA = Spindle Override
TA = Keypad, to be labeled
VA = Feedrate Override
VB = Feedrate Override

Fig. 7-51: Type code

8 Accessories

8.1 Cable / Connector Overview

Connector	Complete INDRAMAT cable	Opposing Connector of the device	Raw Cable	Cable and Configuration
X2	---- 1)	MC 1,5/2ST 2) MN: 253 897	INK 243 MN: 213 383	Supply Voltage
X3, X4	IKS 056/.. MN: 255 968	INS 525 MN: 259 759	INK 234 MN: 220 143	INS 526 MN: 259 762 InterBus-S Connection
X28...X31	----	MC 1,5/9ST 2) MN: 241 591 KGG-MC 1,5/9ST 2) MN: 261 869		Opposing Input Module Connector
	----	MC 1,5/10ST 2) MN: 241 647 KGG-MC 1,5/10ST 2) MN: 261 870		Opposing Output Module Connector

1) Not available as complete cable.
2) Included in BTM16 shipment

Fig. 8-52: Cable / connector overview

8.2 Key Inlays

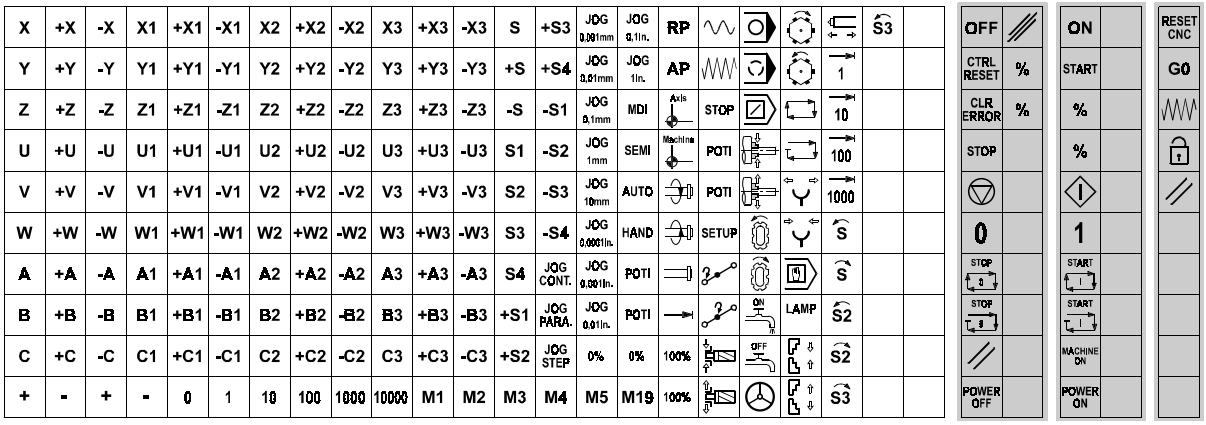

Fig. 8-53: Inlays for key labeling

230 inlays, background white (RAL 9010)
20 inlays, background green (RAL 6017)
20 inlays, background red (RAL0036)
10 inlays, background yellow (RAL 1021)
Material: Polyester foil, thickness 0,2mm

8.3 Scale Foils

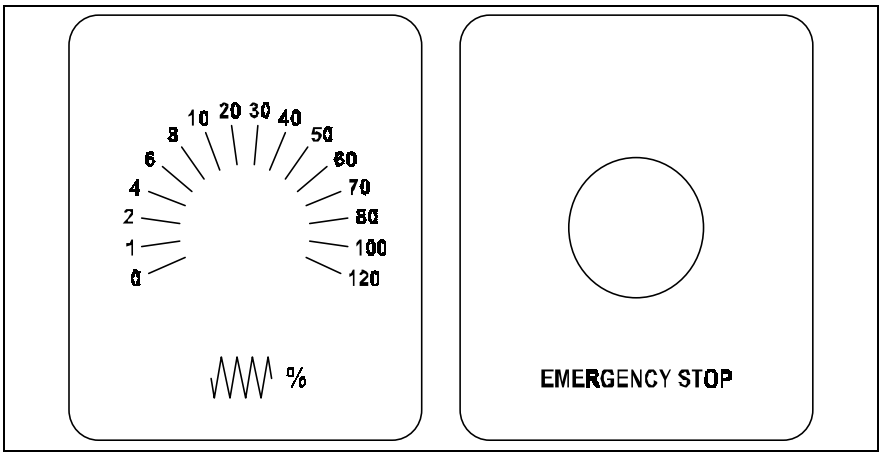

Fig. 8-54: Scale foils

8.4 Key Lids

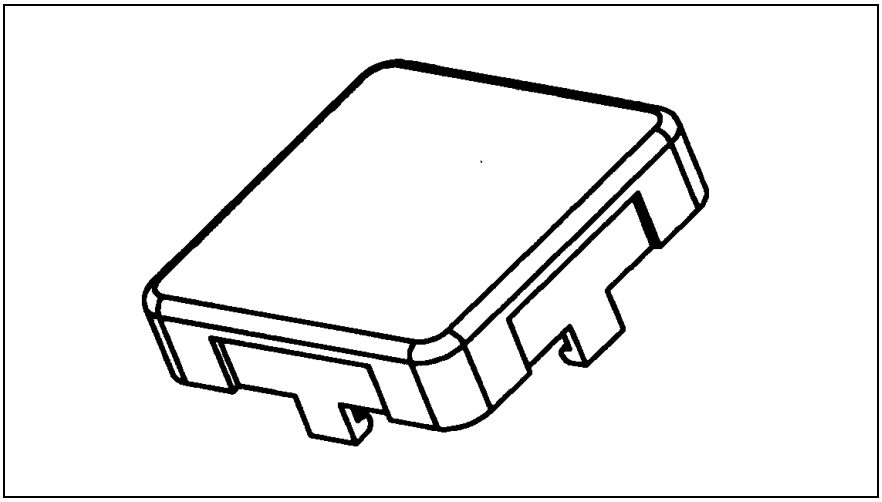

Fig. 8-55: Key lid

8.5 Order Information for Accessories

Designation	Indramat Type	Mat.no.
Key inlays	BEZEICHNUNGSSCHILDER BTM BEDRUCKT	276 710
Scale foils	KENNZEICHNUNGSSCHILD BTM16.1	276 053
Key lid	TASTER-Z TASTENKAPPE TRANSPARENT MIT NUT	262 813

Fig. 8-56: Order information for accessories

9 List of Figures

10 Index

Kundenbetreuungsstellen - Sales & Service Facilities

Deutschland - Germany

Vertriebsgebiet Mitte Germany Centre ☒V/S ☒ Service	Vertriebsgebiet Ost Germany East ☒V/S ☒ Service	Vertriebsgebiet West Germany West ☒V/S ☒ Service	Vertriebsgebiet Nord Germany North ☒V/S ☐ Service
INDRAMAT GmbH Bgm.-Dr.-Nebel-Str. 2 D - 97816 Lohr am Main Telefon: +49 (0)9352/40-0 Telefax: +49 (0)9352/40-4885	INDRAMAT GmbH Beckerstraße 31 D - 09120 Chemnitz Telefon: +49 (0)371/35 55-0 Telefax: +49 (0)371/35 55-333	INDRAMAT GmbH Harkortstraße 25 D - 40849 Ratingen Telefon: +49 (0)2102/43 18-0 Telefax: +49 (0)2102/41 315	INDRAMAT GmbH Kieler Straße 212 D - 22525 Hamburg Telefon: +49 (0)40/85 31 57-0 Telefax: +49 (0)40/85 31 57-15
Vertriebsgebiet Süd Germany South ☒V/S ☐ Service	Gebiet Südwest Germany South-West ☒V/S ☒ Service		INDRAMAT Service-Hotline
INDRAMAT GmbH Ridlerstraße 75 D-80339 München Telefon: +49 (0)89/540138-30 Telefax: +49 (0)89/540138-10	INDRAMAT GmbH Böblinger Straße 25 D-71229 Leonberg Telefon: +49 (0)7152/9 72-6 Telefax: +49 (0)7152/9 72-727		INDRAMAT GmbH Telefon: (+49)-0172/660 04 06 -oder- Telefon: (+49)-0171/333 88 26

Kundenbetreuungsstellen in Deutschland - Service agencies in Germany

Europa - Europe

Austria ☒V/S ☐ Service Mannesmann Rexroth Ges.m.b.H. Geschäftsbereich INDRAMAT Hägelingasse 3 A - 1140 Wien Telefon: +43 (0)1/9852540-400 Telefax: +43 (0)1/9852540-93	**Austria** ☐V/S ☒ Service Mannesmann Rexroth G.m.b.H. Geschäftsbereich INDRAMAT Industriepark 18 A - 4061 Pasching Telefon: +43 (0)7221/605-0 Telefax: +43 (0)7221/605-21	**Belgium** ☒V/S ☒ Service Mannesmann Rexroth N.V.-S.A. Geschäftsbereich INDRAMAT Industrielaan 8 B-1740 Ternat Telefon: +32 (0)2/5823180 Telefax: +32 (0)2/5824310	**Denmark** ☒V/S ☒ Service BEC AS Zinkvej 6 DK-8900 Randers Telefon: +45 (0)87/11 90 60 Telefax: +45 (0)87/11 90 61
England ☒V/S ☒ Service Mannesmann Rexroth Ltd. INDRAMAT Division 4 Esland Place, Love Lane GB - Cirencester, Glos GL7 1YG Telefon: +44 (0)1285/658671 Telefax: +44 (0)1285/654991	**Finland** ☒V/S ☐ Service Rexroth Mecman OY Ansatie 6 SF-017 40 Vantaa Telefon: +358 (0)9/84 91 11 Telefax: +358 (0)9/84 91 13 60	**France** ☒V/S ☒ Service Mannesmann Rexroth Sigma S.A. Division INDRAMAT Parc des Barbanniers 4, Place du Village F-92632 Gennevilliers Cedex Telefon: +33 (0)141 47 54 30 Telefax: +33 (0)147 94 69 41	**France** ☒V/S ☐ Service Rexroth - Sigma S.A. Division INDRAMAT 270, Avenue de Lardenne F - 31100 Toulouse Telefon: +33 (0)5 61 49 95 19 Telefax: +33 (0)5 61 31 00 41
Italy ☒V/S ☒ Service Mannesmann Rexroth S.p.A. Divisione INDRAMAT Via G. Di Vittoria, 1 I - 20063 Cernusco S/N.MI Telefon: +39 (0)2/92 36 52 70 Telefax: +39 (0)2/92 36 55 12	**Italy** ☒V/S ☒ Service Mannesmann Rexroth S.p.A. Divisione INDRAMAT Via Borgomanero, 11 I - 10145 Torino Telefon: +39 (0)11/7 71 22 30 Telefax: +39 (0)11/7 71 01 90	**Italy** ☒V/S ☐ Service Mannesmann Rexroth S.p.A. Divisione INDRAMAT Via del Progresso, 16 (Zona Ind.) I - 35020 Padova Telefon: +39 (0)49/8 70 13 70 Telefax: +39 (0)49/8 70 13 77	**Italy** ☐V/S ☒ Service Mannesmann Rexroth S.p.A. Divisione INDRAMAT Via de Nicola, 12 I - 80053 Castellamare di Stabbia NA Telefon: +39 (0)81/8 72 30 37 Telefax: +39 (0)81/8 72 30 18
Italy ☒V/S ☐ Service Mannesmann Rexroth S.p.A. Divisione INDRAMAT Viale Oriani, 38/A I - 40137 Bologna Telefon: +39 (0)51/34 14 14 Telefax: +39 (0)51/34 14 22	**Netherlands** ☒V/S ☐ Service Hydraudyne Hydrauliek B.V. Kruisbroeksestraat 1 P.O. Box 32 NL - 5281 RV Boxtel Telefon: +31 (0)411/65 19 51 Telefax: +31 (0)411/65 14 83	**Netherlands** ☐V/S ☒ Service Hydrocare B.V. Kruisbroeksestraat 1 P.O. Box 32 NL - 5281 RV Boxtel Telefon: +31 (0)411/65 19 51 Telefax: +31 (0)411/67 78 14	**Spain** ☒V/S ☒ Service Mannesmann Rexroth S.A. Divisiòn INDRAMAT Centro Industrial Santiga Obradors s/n E-08130 Santa Perpetua de Mogoda Barcelona Telefon: +34 937 47 94 00 Telefax: +34 937 47 94 01
Spain ☒V/S ☒ Service Goimendi S.A. División Indramat Jolastokieta (Herrera) Apartado 11 37 E - 20017 San Sebastian Telefon: +34 9 43/40 01 63 Telefax: +34 9 43/39 17 99	**Sweden** ☒V/S ☒ Service Rexroth Mecman Svenska AB INDRAMAT Division Varuvägen 7 S - 125 81 Stockholm Telefon: +46 (0)8/727 92 00 Telefax: +46 (0)8/64 73 277	**Switzerland - West** ☒V/S ☐ Service Mannesmann Rexroth SA Département INDRAMAT Chemin de l`Ecole 6 CH-1036 Sullens Telefon: +41 (0)21/731 43 77 Telefax: +41 (0)21/731 46 78	**Switzerland - East** ☒V/S ☒ Service Mannesmann Rexroth AG Geschäftsbereich INDRAMAT Gewerbestraße 3 CH-8500 Frauenfeld Telefon: +41 (0)52/720 21 00 Telefax: +41 (0)52/720 21 11
Russia ☐V/S ☒ Service Tschudnenko E.B. Arsenia 22 RUS - 153000 Ivanovo Rußland Telefon: +7 093/223 96 33 oder/or +7 093/223 95 48 Telefax: +7 093/223 46 01	**Slowenia** ☒V/S ☒ Service DOMEL Elektromotorji in gospodinjski aparati d. d. Otoki 21 SLO - 64 228 Zelezniki Telefon: +386 64/61 73 32 Telefax: +386 64/64 71 50	**Turkey** ☒V/S ☒ Service Mannesmann Rexroth Hidropar A..S. Fevzi Cakmak Cad No. 3 TR - 34630 Sefaköy Istanbul Telefon: +90 212/541 60 70 Telefax: +90 212/599 34 07	

Europäische Kundenbetreuungsstellen (ohne Deutschland)
European Service agencies (without Germany)

Außerhalb Europa - outside Europe

Argentina ☒V/S ☐ Service Mannesmann Rexroth S.A.I.C. Division INDRAMAT Acassusso 48 41/7 RA - 1605 Munro (Buenos Aires) Telefon: +54 (0)1/756 01 40 +54 (0)1/756 01 36	Argentina ☐V/S ☒ Service NAKASE Asesoramiento Tecnico Calle 49, No. 5764-66 RA - 1653 Villa Balester Provincia de Buenos Aires Telefon: +54 (0) 1/768 24 13 Telefax: +54 (0) 1/768 36 43	Australia ☒V/S ☒ Service AIMS - Australian Industrial Machinery Services Pty. Ltd. Unit 3/45 Horne ST Campbellfield 3061 AUS - Melbourne, VIC Telefon: +61 (0)3/93 59 02 28 Telefax: +61 (0)3/93 59 02 86	Brazil ☒V/S ☒ Service Mannesmann Rexroth Automação Ltda. Divisão INDRAMAT Rua Georg Rexroth, 609 Vila Padre Anchieta BR - 09951-270 Diadema-SP [Caixa Postal 377] [BR-09901-970 Diadema-SP] Telefon: +55 (0)11/745 90 60 +55 (0)11/745 90 70 Telefax: +55 (0)11/745 90 50
Canada ☒V/S ☒ Service Basic Technologies Corporation Burlington Division 3426 Mainway Drive Burlington, Ontario Canada L7M 1A8 Telefon: +1 905/335 55 11 Telefax: +1 905/335-41 84	China ☒V/S ☐ Service Mannesmann Rexroth (China) Ldt. Shanghai Office - Room 206 Shanghai Internat. Trade Centre 2200 Yanan Xi Lu PRC - Shanghai 200335 Telefon: +86 21/62 75 53 33 Telefax: +86 21/62 75 56 66	China ☐V/S ☒ Service Mannesmann Rexroth (China) Ldt. Shanghai Parts & Service Center 199 Wu Cao Road, Hua Cao Minhang District PRC - Shanghai 201 103 Telefon: +86 21/62 20 00 58 Telefax: +86 21/62 20 00 68	China ☒V/S ☐ Service Mannesmann Rexroth (China) Ldt. 15/F China World Trade Center 1, Jianguomenwai Avenue PRC - Beijing 100004 Telefon: +86 10/65 05 03 80 Telefax: +86 10/65 05 03 79
China ☒V/S ☐ Service Mannesmann Rexroth (China) Ldt. A-5F., 123 Lian Shan Street Sha He Kou District PRC - Dalian 116 023 Telefon: +86 411/46 78 930 Telefax: +86 411/46 78 932	Hongkong ☒V/S ☒ Service Rexroth (China) Ldt. 19 Cheung Shun Street 1st Floor, Cheung Sha Wan, Kowloon, Hongkong Telefon: +852 27/41 13 51/-54 oder/or +852 27/41 14 30 Telefax: +852 27/86 07 33	India ☒V/S ☒ Service Mannesmann Rexroth (India) Ltd. INDRAMAT Division Plot. 96, Phase III Peenya Industrial Area IND - Bangalore - 560058 Telefon: +91 (0)80/8 39 21 01 Telefax: +91 (0)80/8 39 43 45	India ☒V/S ☒ Service Mannesmann Rexroth (India) Ltd. INDRAMAT Division Plot. A-58, TTC Industrial Area Thane Turbhe Midc Road Mahape Village IND - Navi Mumbai - 400 701 Telefon: +91 (0)22/7 61 46 22 Telefax: +91 (0)22/7 68 15 31
Indonesia ☒V/S ☐ Service PT. Rexroth Wijayakusuma Jl. Raya Bekasi Km 21 Pulogadung RI - Jakarta Timur 13920 Telefon: +62 21/4 61 04 87 +62 21/4 61 04 88 Telefax: +62 21/4 60 01 52	Japan ☒V/S ☒ Service Rexroth Automation Co., Ltd. INDRAMAT Division 1F, I.R. Building Nakamachidai 4-26-44 Tsuzuki-ku, Yokohama-shi J - Kanagawa-ken 224-004 Telefon: +81 459/42-72 10 Telefax: +81 459/42-03 41	Korea ☒V/S ☒ Service Mannesmann Rexroth-Seki Co Ltd. 1500-12 Da-Dae-Dong ROK - Saha-Ku, Pusan, 604-050 Telefon: +82 (0)51/2 60 06 18 Telefax: +82 (0)51/2 60 06 19	Korea ☒V/S ☒ Service Seo Chang Corporation Ltd. Room 903, Jeail Building 44-35 Yeouido-Dong Yeoungdeungpo-Ku C.P.O.Box 97 56 ROK - Seoul Telefon: +82 (0)2/7 80 82 08 +82 (0)2/7 80 82 09 Telefax: +82 (0)2/7 84 54 08
Mexico ☒V/S ☒ Service Motorización y Diseño de Controles SA de CV Ant. Camino a Sta. Monica No. 7 San Lucas Tepetlacalco MEX - 54060 Tlalnepantla Telefon: +52 53/97 86 44 Telefax: +52 53/98 98 88	New Zealand ☒V/S ☒ Service Engineering Computer Services Ltd. P. O. box 20 204 Te Rapa NZ - Hamilton Telefon: +64 (0)7/8 49 22 11 Telefax: +64 (0)7/8 49 22 20	South Africa ☒V/S ☒ Service HYTEC Automation (Pty) Ltd. 28 Banfield Road,Industria North RSA - Maraisburg 1700 Telefon: +27 (0)11/673 20 80 Telefax: +27 (0)11/673 72 69	Taiwan ☒V/S ☐ Service Rexroth Uchida Co., Ltd. No.1, Tsu Chiang Street Tu Cheng Ind. Estate Taipei Hsien, Taiwan, R.O.C. Telefon: +886 2/2 68 13 47 Telefax: +886 2/2 68 53 88

Kundenbetreuungsstellen außerhalb Europa - Service agencies outside Europe

Außerhalb Europa / USA - outside Europe / USA

USA ☒V/S ☒ Service	USA ☒V/S ☒ Service	USA ☒V/S ☒ Service	USA ☒V/S ☒ Service
Mannesmann Rexroth Corporation INDRAMAT Division 5150 Prairie Stone Parkway USA -Hoffman Estates, IL 60192-3707 Telefon: +1 847/6 45 36 00 Telefax: +1 857/6 45 62 01	Mannesmann Rexroth Corporation INDRAMAT Division Central Region Technical Center USA - Auburn Hills, MI 48326 Telefon: +1 248/3 93 33 30 Telefax: +1 248/3 93 29 06	Mannesmann Rexroth Corporation INDRAMAT Division Southeastern Technical Center 3625 Swiftwater Park Drive USA - Suwanee Georgia 30174 Telefon: +1 770/9 32 32 00 +1 770/9 32 19 03	Mannesmann Rexroth Corporation INDRAMAT Division Northeastern Technical Center 99 Rainbow Road USA - East Granby, Connecticut 06026 Telefon: +1 860/8 44 83 77 +1 860/8 44 85 95

USA ☒V/S ☒ Service
Mannesmann Rexroth Corporation INDRAMAT Division Charlotte Regional Sales Office 14001 South Lakes Drive USA - Charlotte, North Carolina 28273 Telefon: +1 704/5 83 97 62 +1 704/5 83 14 86

Kundenbetreuungsstellen außerhalb Europa / USA
Service agencies outside Europe / USA

Notes

Indramat